DRX_ANT

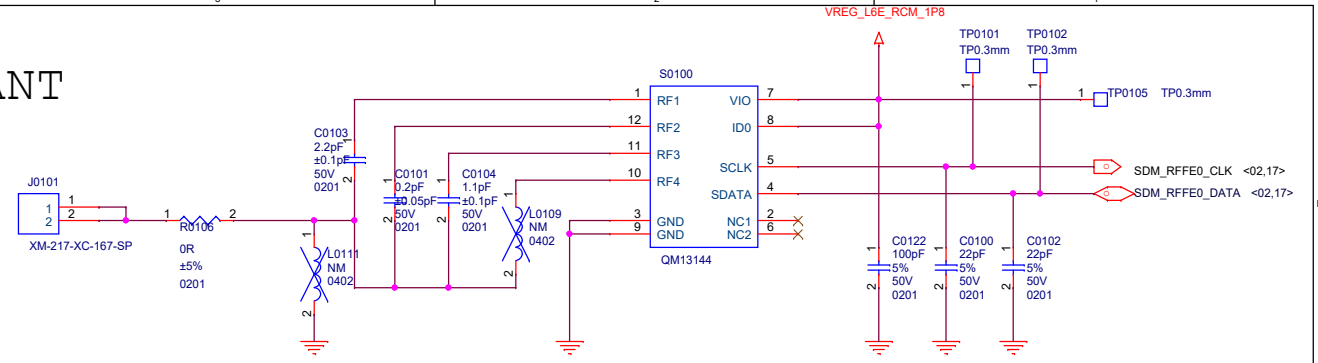

接地弹片　　接地垫片　　夹子

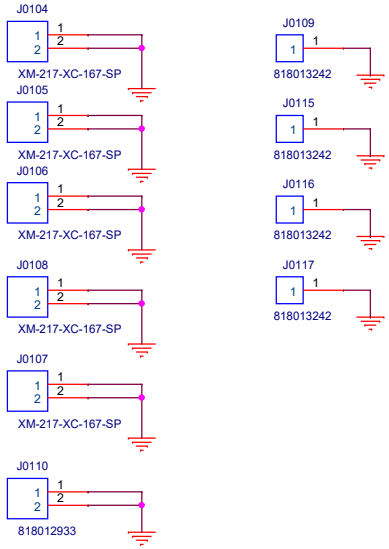

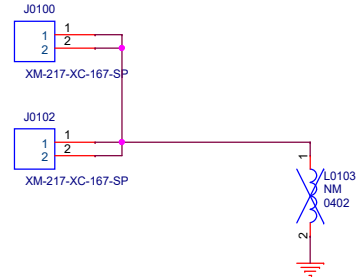

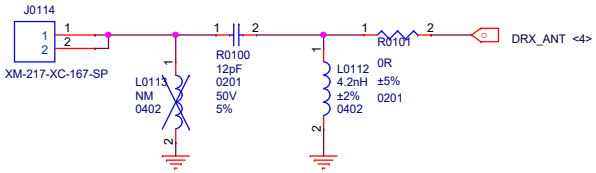

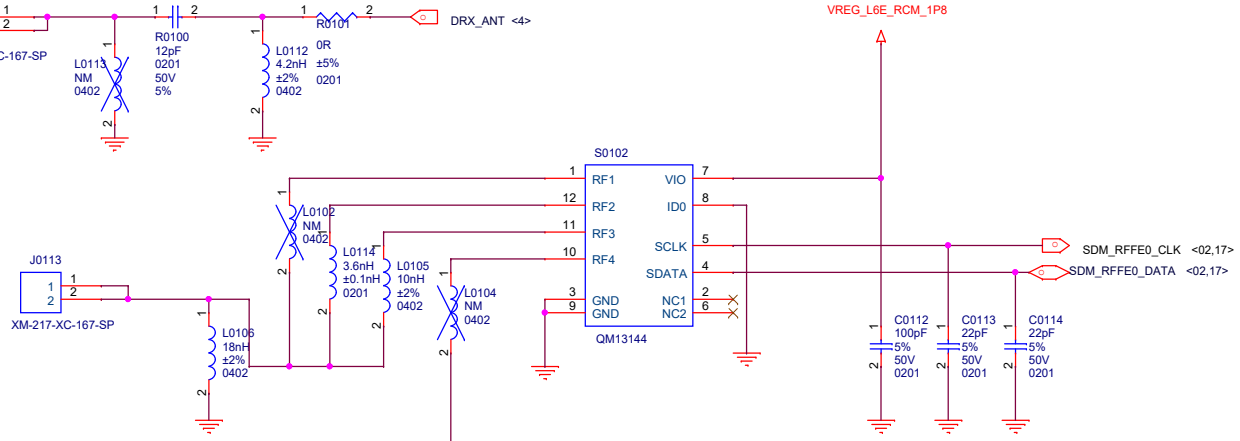

ANT4 n41 TRX+n78+n79 TRX

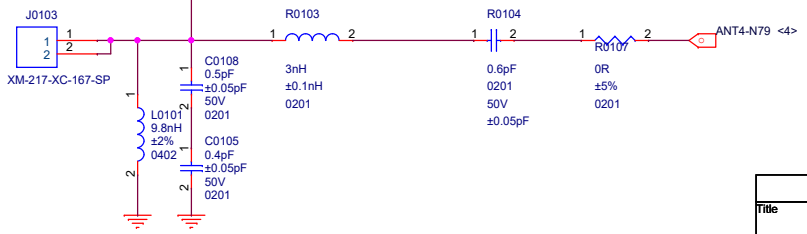

Title	J11 MAIN
Size A3	Document Number <Doc>
Date: Monday, December 23, 2019	Sheet 02 of 74

GPS L5

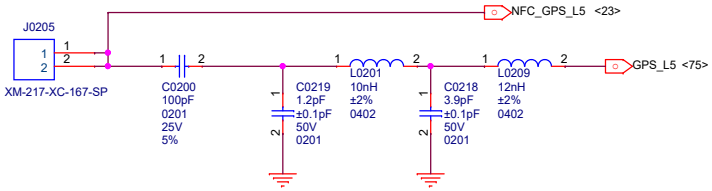

GPS L1+ WIFI2.4G CH0+WIFI 5G ANT2

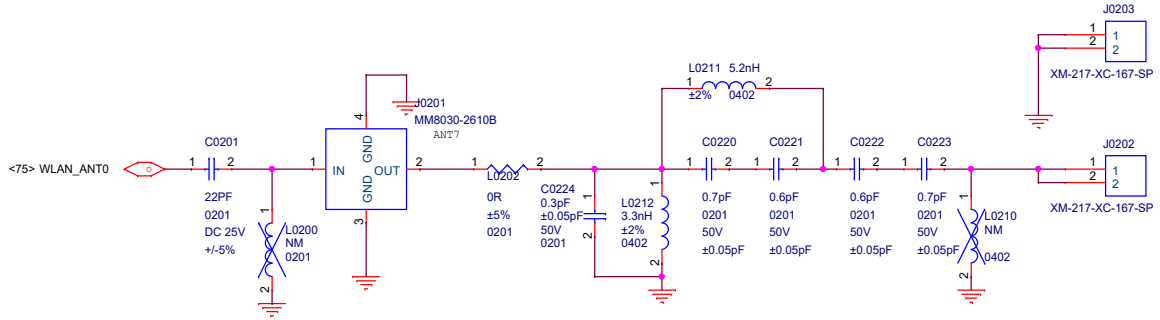

ANT5 WIFI2.4G+5G

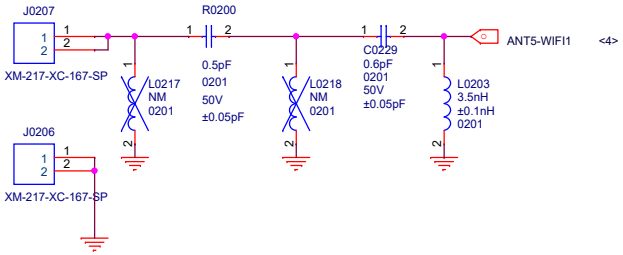

ANT7 N78+N79

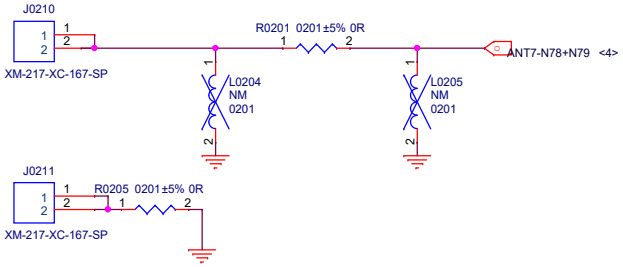

Title	J11 MAIN	
Size A3	Document Number <Doc>	P0
Date: Monday, December 23, 2019	Sheet 3 of 74	

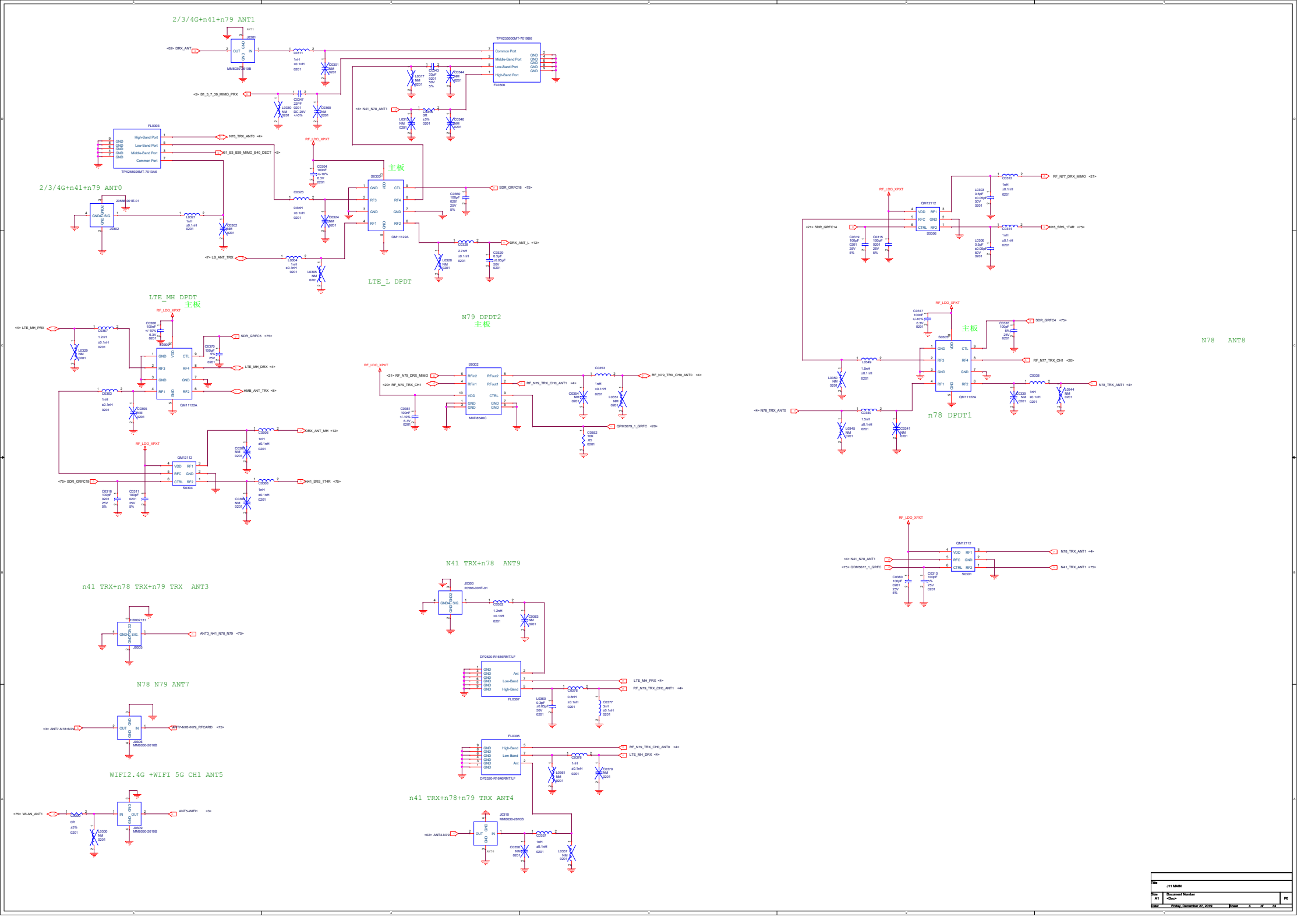

Title	J11 MAIN		
Size A1	Document Number <Doc>		P0
Date: Friday, December 27, 2019	Sheet 4 of 74		

B1+3+7+39 MIMO PRX

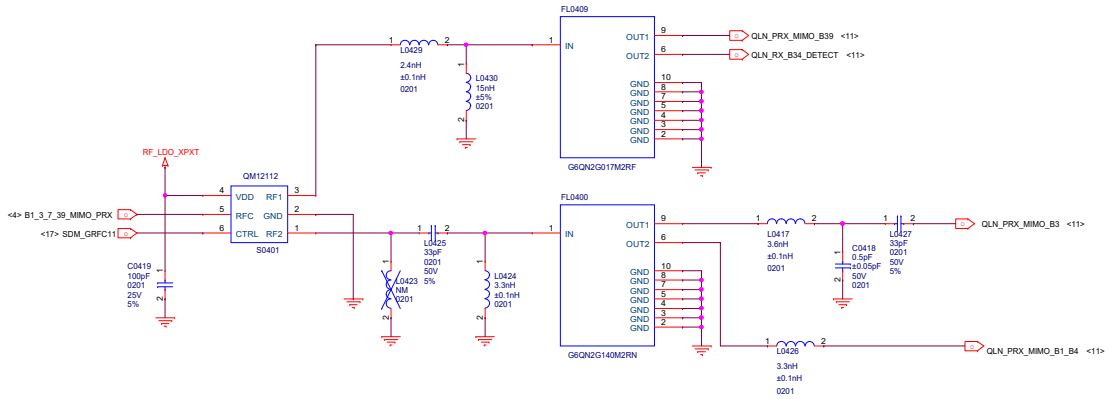

B1+3+7+39 MIMO DRX

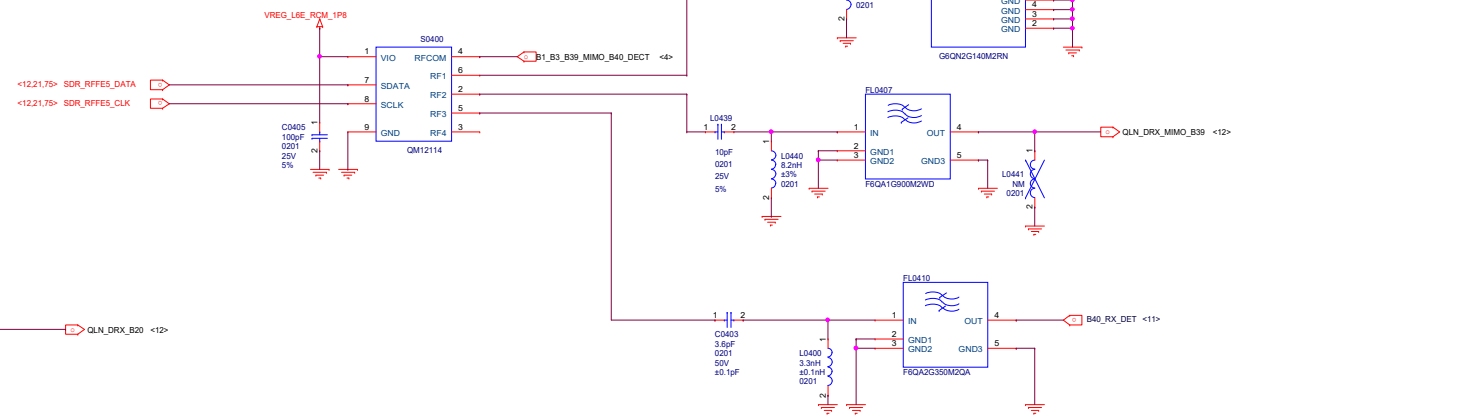

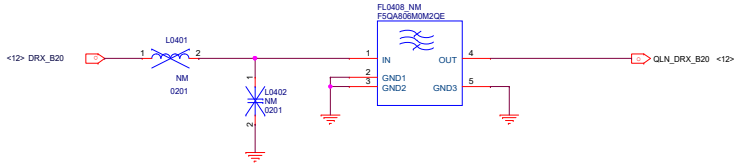

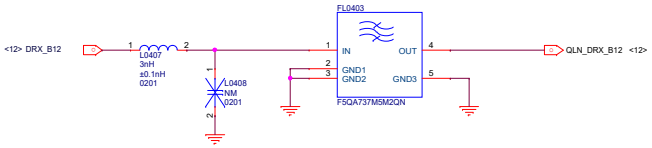

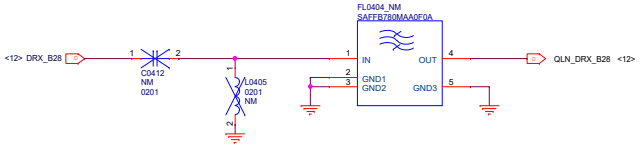

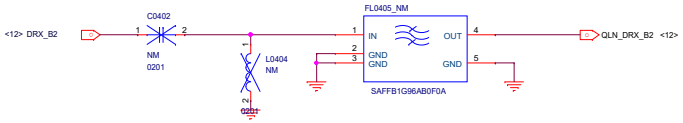

Title	J11 MAIN
Size A2	Document Number <Doc>
Date:	Monday, December 23, 2019

LB S-PAD

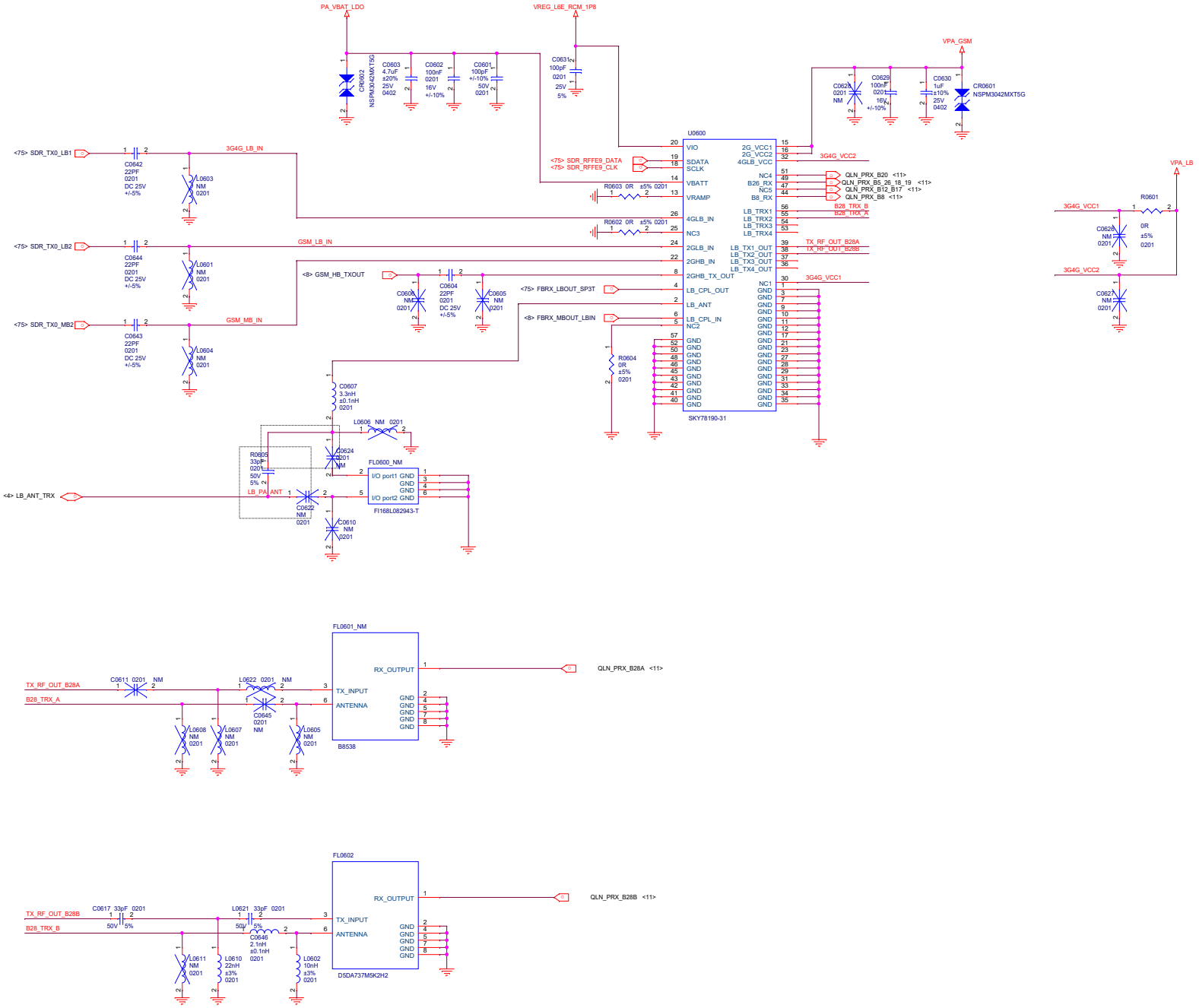

Title	J11 MAIN
Size A2	Document Number PA1
Date: Monday, December 23, 2019	Sheet

MHB S-PAD

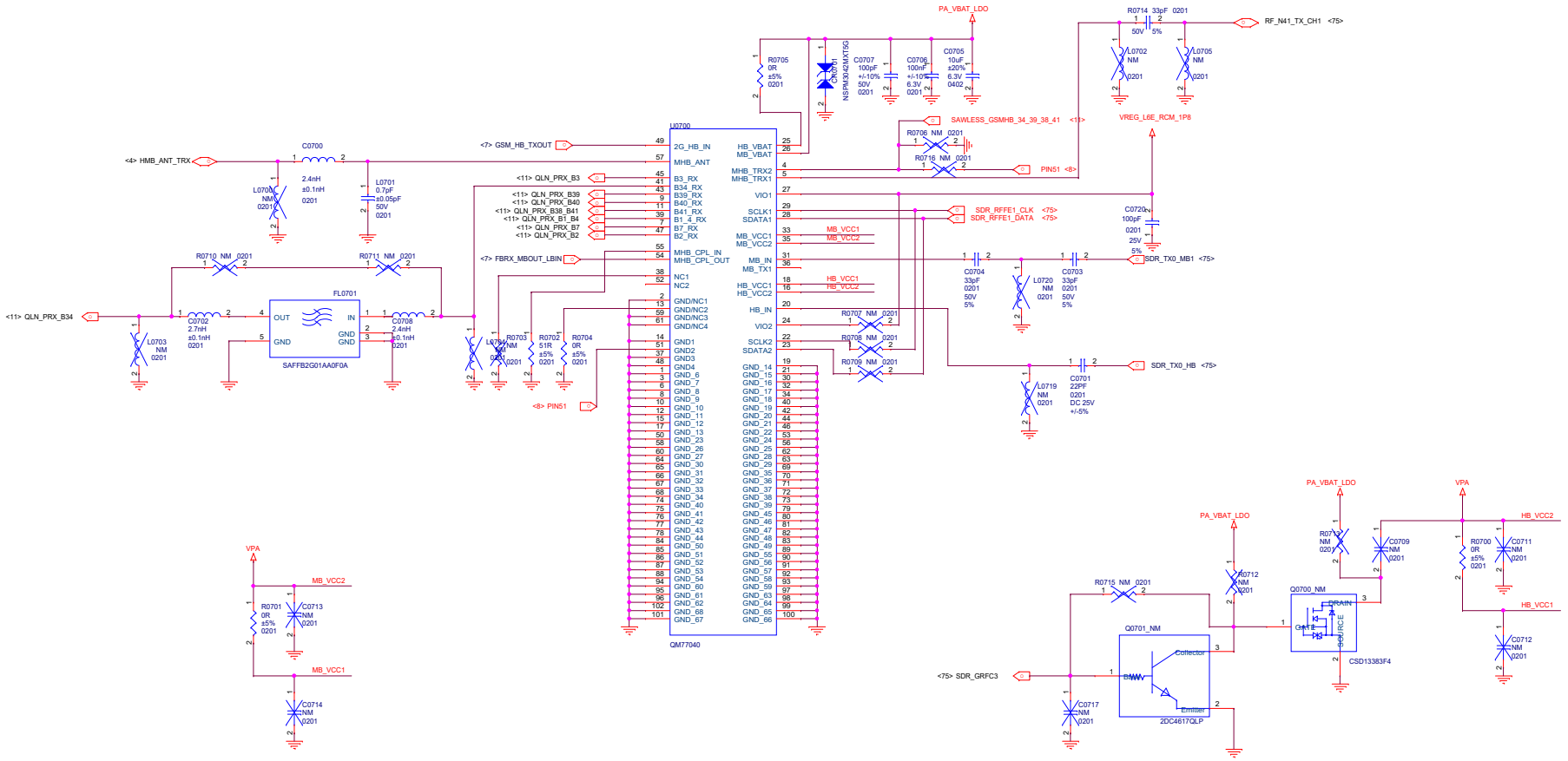

Title	J11 MAIN
Size A2	Document Number PA2
Date: Monday, December 23, 2019	Sheet

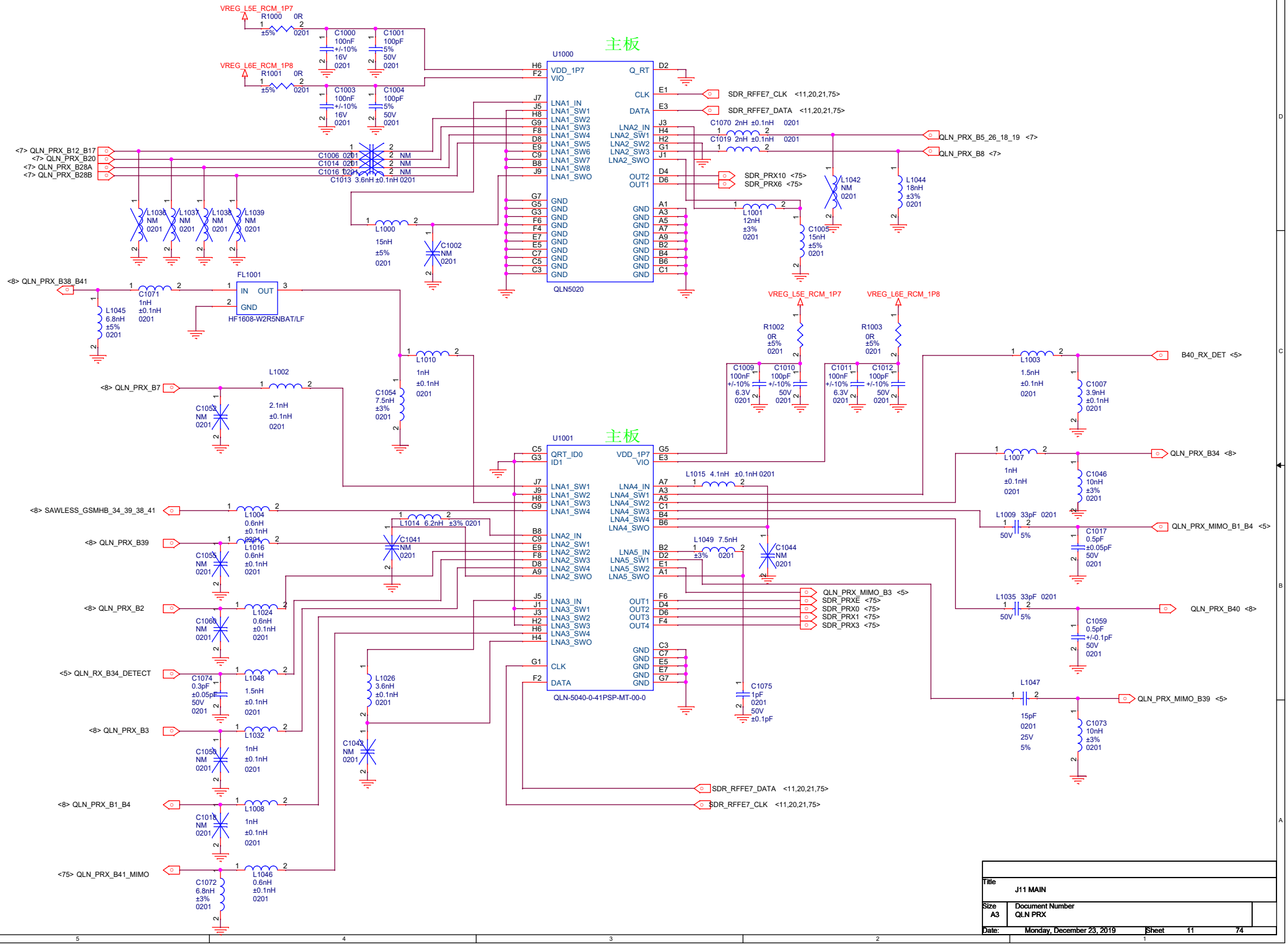
主板
U1000
QLN5020
VDD_1P7
VIO
Q_RT
CLK
DATA
LNA1_IN
LNA1_SW1
LNA1_SW2
LNA1_SW3
LNA1_SW4
LNA1_SW5
LNA1_SW6
LNA1_SW7
LNA1_SW8
LNA1_SWO
LNA2_IN
LNA2_SW1
LNA2_SW2
LNA2_SW3
LNA2_SWO
OUT2
OUT1
GND
VREG_L5E_RCM_1P7
VREG_L6E_RCM_1P8
R1000 0R ±5% 0201
R1001 0R ±5% 0201
C1000 100nF +/-10% 16V 0201
C1001 100pF 5% 50V 0201
C1003 100nF +/-10% 16V 0201
C1004 100pF 5% 50V 0201
SDR_RFFE7_CLK <11,20,21,75>
SDR_RFFE7_DATA <11,20,21,75>
C1070 2nH ±0.1nH 0201
C1019 2nH ±0.1nH 0201
QLN_PRX_B5_26_18_19 <7>
QLN_PRX_B8 <7>
SDR_PRX10 <75>
SDR_PRX6 <75>
L1042 NM 0201
L1044 18nH ±3% 0201
L1001 12nH ±3% 0201
C1005 15nH ±5% 0201
<7> QLN_PRX_B12_B17
<7> QLN_PRX_B20
<7> QLN_PRX_B28A
<7> QLN_PRX_B28B
C1006 0201 NM
C1014 0201 NM
C1016 0201 NM
C1013 3.6nH ±0.1nH 0201
L1038 NM 0201
L1037 NM 0201
L1036 NM 0201
L1039 NM 0201
L1000 15nH ±5% 0201
C1002 NM 0201
<8> QLN_PRX_B38_B41
FL1001
IN OUT
GND
HF1608-W2R5NBAT/LF
C1071 1nH ±0.1nH 0201
L1045 6.8nH ±5% 0201
L1010 1nH ±0.1nH 0201
C1054 7.5nH ±3% 0201
<8> QLN_PRX_B7
L1002 2.1nH ±0.1nH 0201
C1052 NM 0201
R1002 0R ±5% 0201
R1003 0R ±5% 0201
C1009 100nF +/-10% 6.3V 0201
C1010 100pF +/-10% 50V 0201
C1011 100nF +/-10% 6.3V 0201
C1012 100pF +/-10% 50V 0201
L1003 1.5nH ±0.1nH 0201
B40_RX_DET <5>
C1007 3.9nH ±0.1nH 0201
U1001
QLN-5040-0-41PSP-MT-00-0
QRT_ID0
ID1
LNA4_IN
LNA4_SW1
LNA4_SW2
LNA4_SW3
LNA4_SW4
LNA4_SWO
LNA5_IN
LNA5_SW1
LNA5_SW2
LNA5_SWO
LNA3_IN
LNA3_SW1
LNA3_SW2
LNA3_SW3
LNA3_SW4
LNA3_SWO
L1015 4.1nH ±0.1nH 0201
L1007 1nH ±0.1nH 0201
QLN_PRX_B34 <8>
C1046 10nH ±3% 0201
<8> SAWLESS_GSMHB_34_39_38_41
L1004 0.6nH ±0.1nH 0201
L1014 6.2nH ±3% 0201
L1009 33pF 0201 50V 5%
QLN_PRX_MIMO_B1_B4 <5>
C1017 0.5pF ±0.05pF 50V 0201
<8> QLN_PRX_B39
L1016 0.6nH ±0.1nH 0201
C1041 NM 0201
C1055 NM 0201
L1049 7.5nH ±3% 0201
C1044 NM 0201
QLN_PRX_MIMO_B3 <5>
SDR_PRXE <75>
SDR_PRX0 <75>
SDR_PRX1 <75>
SDR_PRX3 <75>
L1035 33pF 0201 50V 5%
QLN_PRX_B40 <8>
C1059 0.5pF +/-0.1pF 50V 0201
<8> QLN_PRX_B2
L1024 0.6nH ±0.1nH 0201
C1060 NM 0201
<5> QLN_RX_B34_DETECT
C1074 0.3pF ±0.05pF 50V 0201
L1048 1.5nH ±0.1nH 0201
L1026 3.6nH ±0.1nH 0201
C1075 1pF 0201 50V ±0.1pF
L1047 15pF 0201 25V 5%
QLN_PRX_MIMO_B39 <5>
C1073 10nH ±3% 0201
<8> QLN_PRX_B3
L1032 1nH ±0.1nH 0201
C1058 NM 0201
C1042 NM 0201
SDR_RFFE7_DATA <11,20,21,75>
SDR_RFFE7_CLK <11,20,21,75>
<8> QLN_PRX_B1_B4
L1008 1nH ±0.1nH 0201
C1018 NM 0201
<75> QLN_PRX_B41_MIMO
C1072 6.8nH ±3% 0201
L1046 0.6nH ±0.1nH 0201
Title
J11 MAIN
Size A3
Document Number
QLN PRX
Date: Monday, December 23, 2019
Sheet 11 74

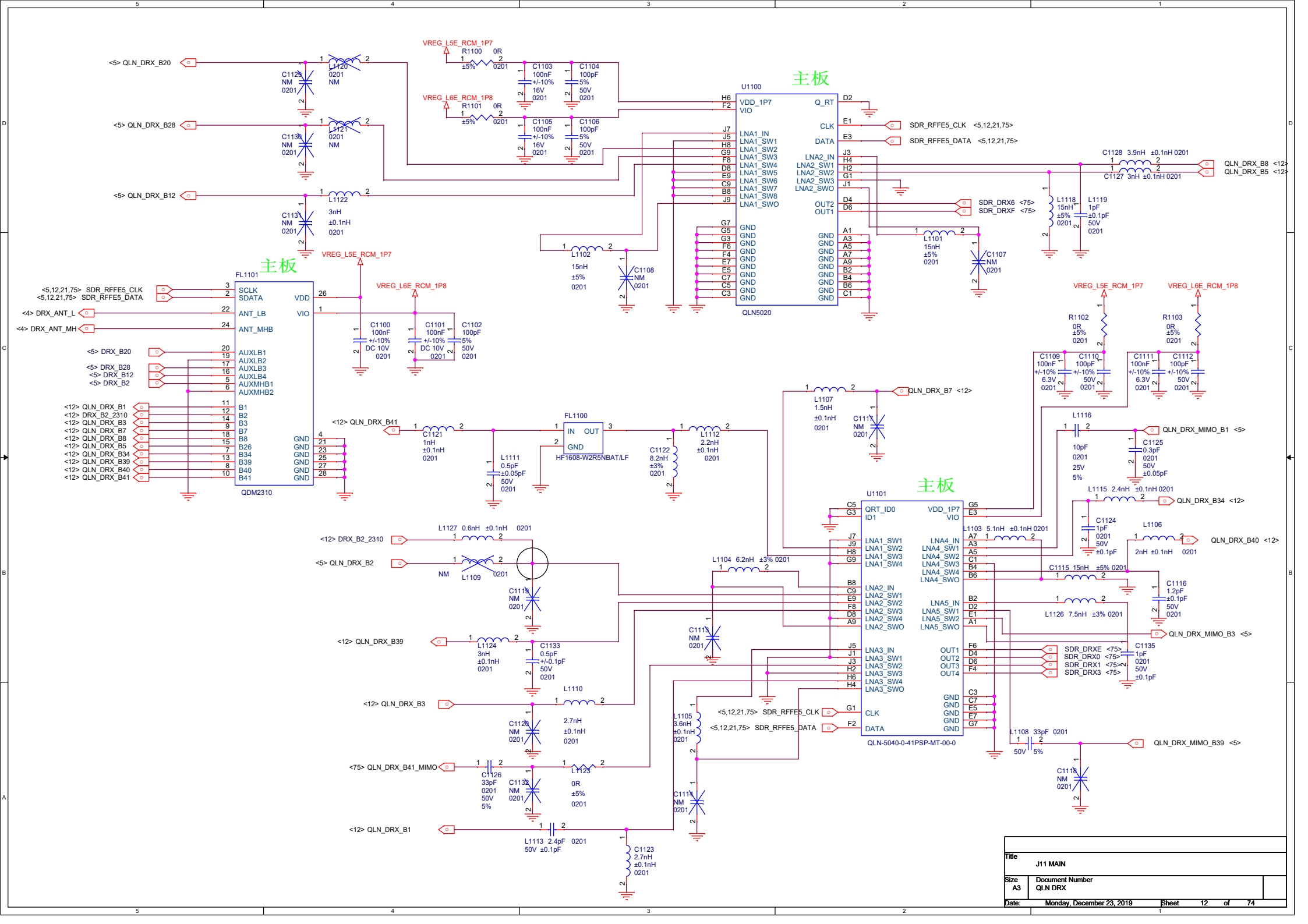
主板
U1100
QLN5020
VDD_1P7
VIO
Q_RT
CLK
DATA
LNA1_IN
LNA1_SW1
LNA1_SW2
LNA1_SW3
LNA1_SW4
LNA1_SW5
LNA1_SW6
LNA1_SW7
LNA1_SW8
LNA1_SWO
LNA2_IN
LNA2_SW1
LNA2_SW2
LNA2_SW3
LNA2_SWO
OUT2
OUT1
GND
<5> QLN_DRX_B20
<5> QLN_DRX_B28
<5> QLN_DRX_B12
VREG_L5E_RCM_1P7
VREG_L6E_RCM_1P8
R1100 0R ±5% 0201
R1101 0R ±5% 0201
C1103 100nF +/-10% 16V 0201
C1104 100pF 5% 50V 0201
C1105 100nF +/-10% 16V 0201
C1106 100pF 5% 50V 0201
L1120 0201 NM
L1121 0201 NM
L1122 3nH ±0.1nH 0201
SDR_RFFE5_CLK <5,12,21,75>
SDR_RFFE5_DATA <5,12,21,75>
C1128 3.9nH ±0.1nH 0201
C1127 3nH ±0.1nH 0201
QLN_DRX_B8 <12>
QLN_DRX_B5 <12>
L1118 15nH ±5% 0201
L1119 1pF ±0.1pF 50V 0201
SDR_DRX6 <75>
SDR_DRXF <75>
L1101 15nH ±5% 0201
C1107 NM 0201
L1102 15nH ±5% 0201
C1108 NM 0201
主板
FL1101
QDM2310
SCLK
SDATA
ANT_LB
ANT_MHB
AUXLB1
AUXLB2
AUXLB3
AUXLB4
AUXMHB1
AUXMHB2
B1
B2
B3
B7
B8
B26
B34
B39
B40
B41
<5,12,21,75> SDR_RFFE5_CLK
<5,12,21,75> SDR_RFFE5_DATA
<4> DRX_ANT_L
<4> DRX_ANT_MH
<5> DRX_B20
<5> DRX_B28
<5> DRX_B12
<5> DRX_B2
<12> QLN_DRX_B1
<12> DRX_B2_2310
<12> QLN_DRX_B3
<12> QLN_DRX_B8
<12> QLN_DRX_B5
<12> QLN_DRX_B34
<12> QLN_DRX_B39
<12> QLN_DRX_B40
<12> QLN_DRX_B41
C1100 100nF +/-10% DC 10V 0201
C1101 100nF +/-10% DC 10V 0201
C1102 100pF 5% 50V 0201
<12> QLN_DRX_B41
C1121 1nH ±0.1nH 0201
L1111 0.5pF ±0.05pF 50V 0201
FL1100
HF1608-W2R5NBAT/LF
C1122 8.2nH ±3% 0201
L1112 2.2nH ±0.1nH 0201
L1107 1.5nH ±0.1nH 0201
QLN_DRX_B7 <12>
R1102 0R ±5% 0201
R1103 0R ±5% 0201
C1109 100nF +/-10% 6.3V 0201
C1110 100pF +/-10% 50V 0201
C1111 100nF +/-10% 6.3V 0201
C1112 100pF +/-10% 50V 0201
L1116 10pF 0201 25V 5%
QLN_DRX_MIMO_B1 <5>
C1125 0.3pF 0201 50V ±0.05pF
主板
U1101
QLN-5040-0-41PSP-MT-00-0
QRT_ID0
ID1
LNA1_SW1
LNA1_SW2
LNA1_SW3
LNA1_SW4
LNA2_IN
LNA2_SW1
LNA2_SW2
LNA2_SW3
LNA2_SW4
LNA2_SWO
LNA3_IN
LNA3_SW1
LNA3_SW2
LNA3_SW3
LNA3_SW4
LNA3_SWO
LNA4_IN
LNA4_SW1
LNA4_SW2
LNA4_SW3
LNA4_SW4
LNA4_SWO
LNA5_IN
LNA5_SW1
LNA5_SW2
LNA5_SWO
OUT1
OUT2
OUT3
OUT4
L1115 2.4nH ±0.1nH 0201
QLN_DRX_B34 <12>
C1124 1pF 0201 50V ±0.1pF
L1106 2nH ±0.1nH 0201
QLN_DRX_B40 <12>
L1103 5.1nH ±0.1nH 0201
C1115 15nH ±5% 0201
C1116 1.2pF ±0.1pF 50V 0201
L1126 7.5nH ±3% 0201
QLN_DRX_MIMO_B3 <5>
SDR_DRXE <75>
SDR_DRX0 <75>
SDR_DRX1 <75>
SDR_DRX3 <75>
C1135 1pF 0201 50V ±0.1pF
L1108 33pF 0201 50V 5%
QLN_DRX_MIMO_B39 <5>
L1127 0.6nH ±0.1nH 0201
<12> DRX_B2_2310
<5> QLN_DRX_B2
L1109 0201 NM
L1104 6.2nH ±3% 0201
<12> QLN_DRX_B39
L1124 3nH ±0.1nH 0201
C1133 0.5pF +/-0.1pF 50V 0201
<12> QLN_DRX_B3
L1110 2.7nH ±0.1nH 0201
L1105 3.6nH ±0.1nH 0201
<5,12,21,75> SDR_RFFE5_CLK
<5,12,21,75> SDR_RFFE5_DATA
<75> QLN_DRX_B41_MIMO
C1126 33pF 0201 50V 5%
L1123 0R ±5% 0201
<12> QLN_DRX_B1
L1113 2.4pF 0201 50V ±0.1pF
C1123 2.7nH ±0.1nH 0201
Title
J11 MAIN
Size
A3
Document Number
QLN DRX
Date:
Monday, December 23, 2019
Sheet
12
of
74

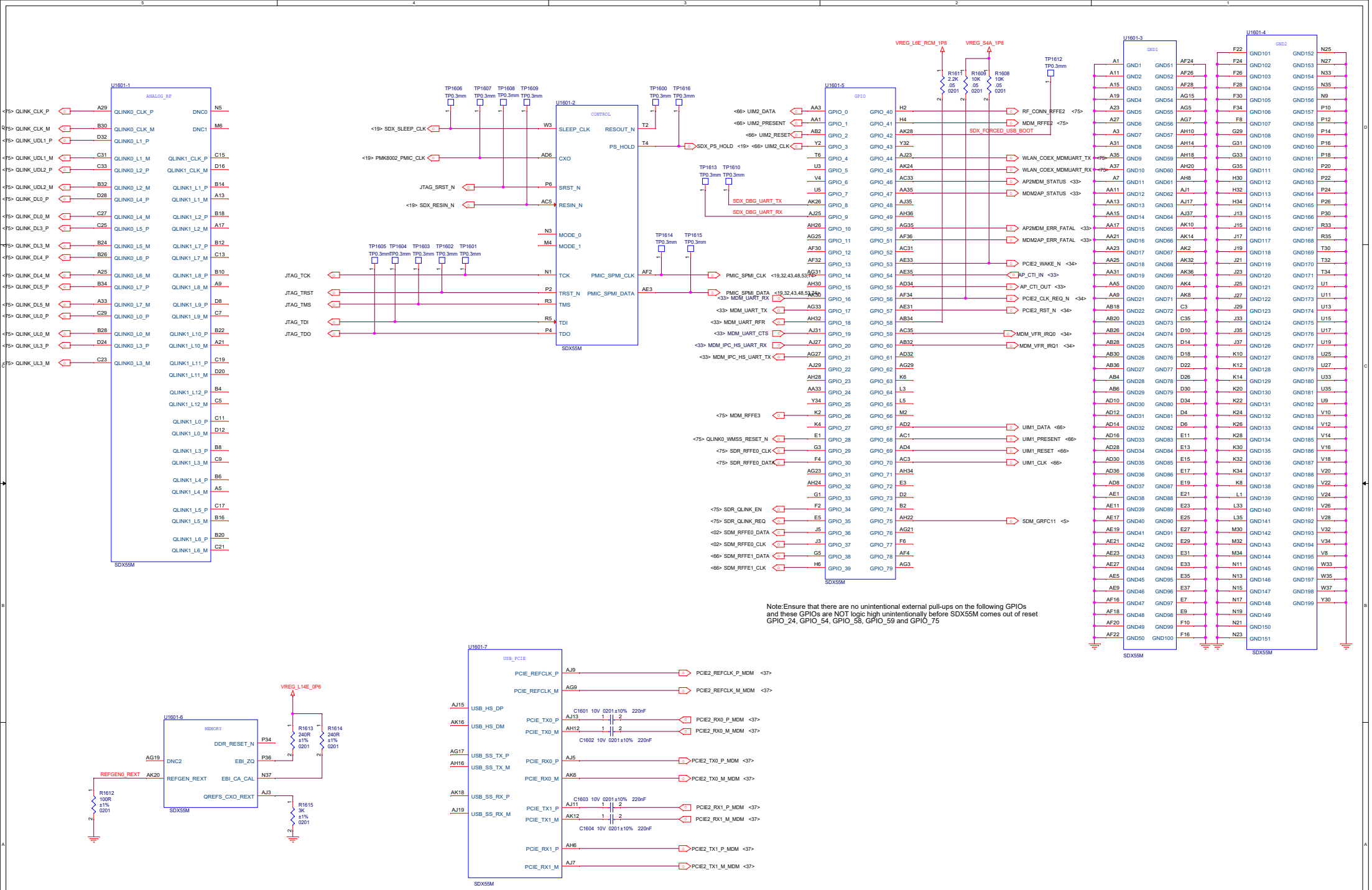

Title	J11 MAIN
Size A2	Document Number Reserved(for 5G-sub 6G)
Date: Monday, December 23, 2019	Sheet

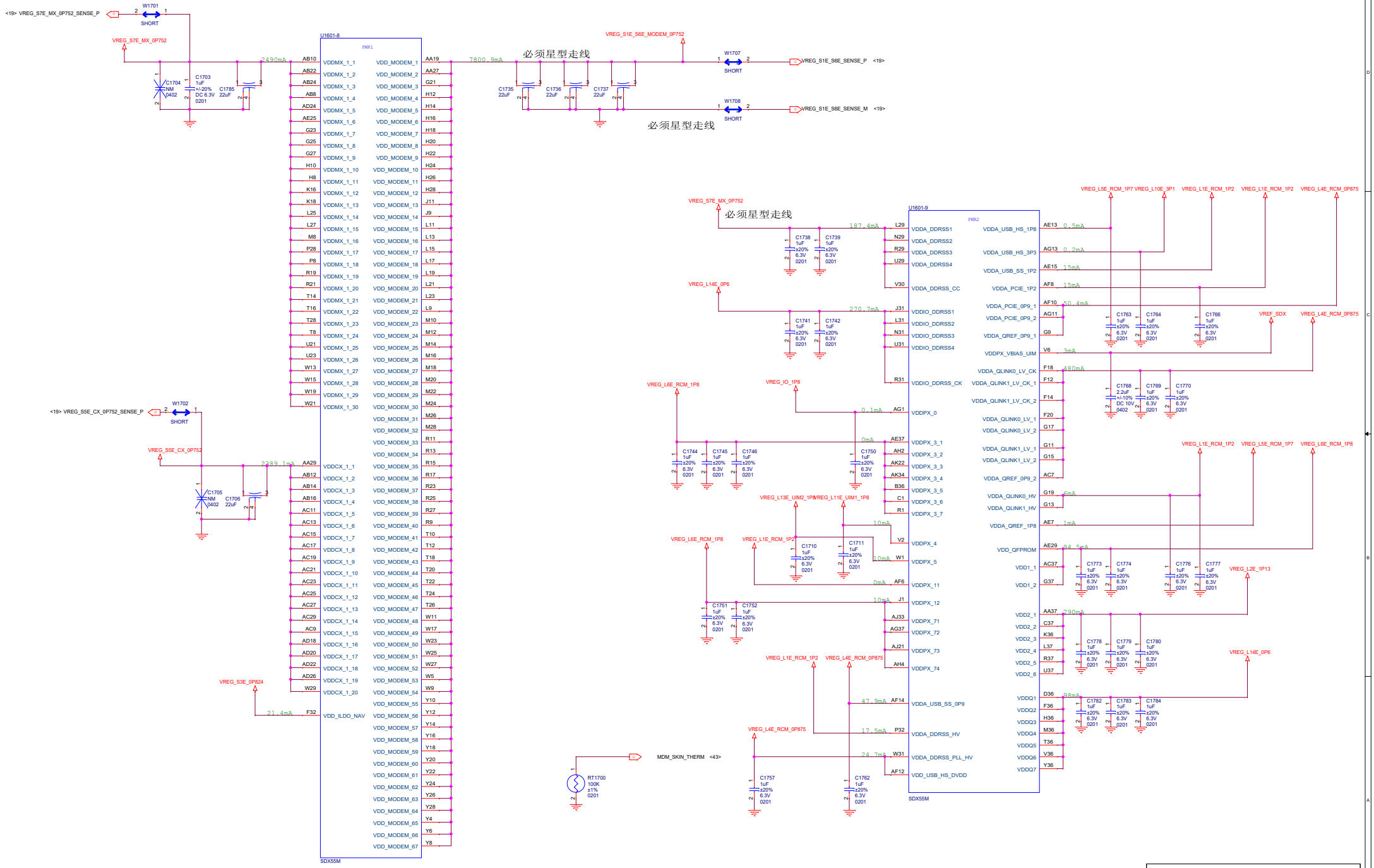
U1601-8
PWR1
SDX55M
U1601-9
PWR2
SDX55M
必须星型走线
必须星型走线
必须星型走线
W1701
W1702
W1707
W1708
SHORT
VREG_S7E_MX_0P752
VREG_S5E_CX_0P752
VREG_S1E_S6E_MODEM_0P752
VREG_S3E_0P824
VREG_L14E_0P6
VREG_L6E_RCM_1P8
VREG_IO_1P8
VREG_L13E_UIM2_1P8/VREG_L11E_UIM1_1P8
VREG_L1E_RCM_1P2
VREG_L4E_RCM_0P875
VREG_L5E_RCM_1P7
VREG_L10E_3P1
VREG_L1E_RCM_1P2
VREG_L4E_RCM_0P875
VREF_SDX
VREG_L2E_1P13
MDM_SKIN_THERM <43>
RT1700
100K
±1%
0201
C1704
NM
0402
C1703
1uF
+/-20%
DC 6.3V
0201
C1785
22uF
C1705
NM
0402
C1706
22uF
C1735
22uF
C1736
22uF
C1737
22uF
C1738
1uF
±20%
6.3V
0201
C1739
1uF
±20%
6.3V
0201
C1741
1uF
±20%
6.3V
0201
C1742
1uF
±20%
6.3V
0201
C1744
1uF
±20%
6.3V
0201
C1745
1uF
±20%
6.3V
0201
C1746
1uF
±20%
6.3V
0201
C1750
1uF
±20%
6.3V
0201
C1710
1uF
±20%
6.3V
0201
C1711
1uF
±20%
6.3V
0201
C1751
1uF
±20%
6.3V
0201
C1752
1uF
±20%
6.3V
0201
C1757
1uF
±20%
6.3V
0201
C1762
1uF
±20%
6.3V
0201
C1763
1uF
±20%
6.3V
0201
C1764
1uF
±20%
6.3V
0201
C1766
1uF
±20%
6.3V
0201
C1768
2.2uF
+/-10%
DC 10V
0402
C1769
1uF
±20%
6.3V
0201
C1770
1uF
±20%
6.3V
0201
C1773
1uF
±20%
6.3V
0201
C1774
1uF
±20%
6.3V
0201
C1776
1uF
±20%
6.3V
0201
C1777
1uF
±20%
6.3V
0201
C1778
1uF
±20%
6.3V
0201
C1779
1uF
±20%
6.3V
0201
C1780
1uF
±20%
6.3V
0201
C1782
1uF
±20%
6.3V
0201
C1783
1uF
±20%
6.3V
0201
C1784
1uF
±20%
6.3V
0201
Title
J11 MAIN
Size
A2
Document Number
Reserved(for MM Wave)
Date:
Monday, December 23, 2019
Sheet

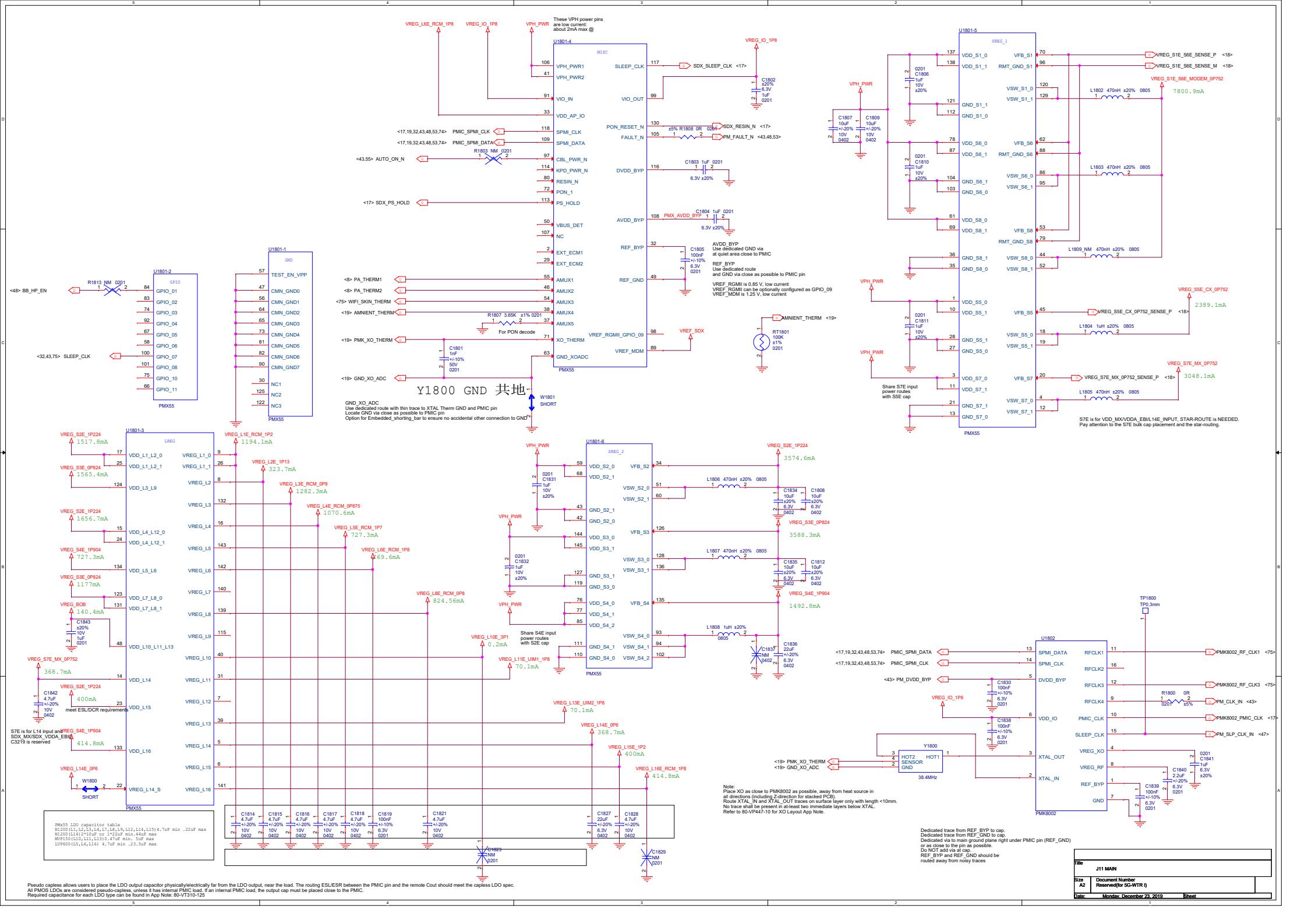
U1801-4
MISC
PMX55
U1801-5
SREG_1
U1801-6
SREG_2
U1801-1
GND
U1801-2
GPIO
U1801-3
LREG
U1802
PMK8002
Y1800
38.4MHz
TP1800
TP0.3mm
W1801
SHORT
W1800
SHORT
Y1800 GND 共地
These VPH power pins are low current: about 2mA max @
AVDD_BYP
Use dedicated GND via at quiet area close to PMIC
REF_BYP
Use dedicated route and GND via close as possible to PMIC pin
VREF_RGMII is 0.85 V, low current
VREF_RGMII can be optionally configured as GPIO_09
VREF_MDM is 1.25 V, low current
For PON decode
GND_XO_ADC
Use dedicated route with thin trace to XTAL Therm GND and PMIC pin
Locate GND via close as possible to PMIC pin
Option for Embedded_shorting_bar to ensure no accidental other connection to GND
Share S7E input power routes with S5E cap
Share S4E input power routes with S2E cap
S7E is for VDD_MX/VDDA_EBI/L14E_INPUT, STAR-ROUTE is NEEDED.
Pay attention to the S7E bulk cap placement and the star-routing.
S7E is for L14 input and SDX_MX/SDX_VDDA_EBI
C3219 is reserved
meet ESL/DCR requirements
PMX55 LDO capacitor table
N1200(L1,L2,L3,L4,L7,L8,L9,L12,L14,L15)4.7uF min .22uF max
N1200(L14)2*10uF or 1*22uF min.44uF max
MVP150(L10,L11,L13)0.47uF min. 5uF max
LVP600(L5,L6,L16) 4.7uF min .23.5uF max
Note:
Place XO as close to PMK8002 as possible, away from heat source in all directions (including Z-direction for stacked PCB).
Route XTAL_IN and XTAL_OUT traces on surface layer only with length <10mm.
No trace shall be present in at-least two immediate layers below XTAL.
Refer to 80-VP447-10 for XO Layout App Note.
Dedicated trace from REF_BYP to cap.
Dedicated trace from REF_GND to cap.
Dedicated via to main ground plane right under PMIC pin (REF_GND) or as close to the pin as possible.
Do NOT add via at cap.
REF_BYP and REF_GND should be routed away from noisy traces
Pseudo capless allows users to place the LDO output capacitor physically/electrically far from the LDO output, near the load. The routing ESL/ESR between the PMIC pin and the remote Cout should meet the capless LDO spec.
All PMOS LDOs are considered pseudo-capless, unless it has internal PMIC load. If an internal PMIC load, the output cap must be placed close to the PMIC.
Required capacitance for each LDO type can be found in App Note: 80-VT310-125
Title
J11 MAIN
Size A2
Document Number
Reserved(for 5G-WTR I)
Date: Monday, December 23, 2019
Sheet

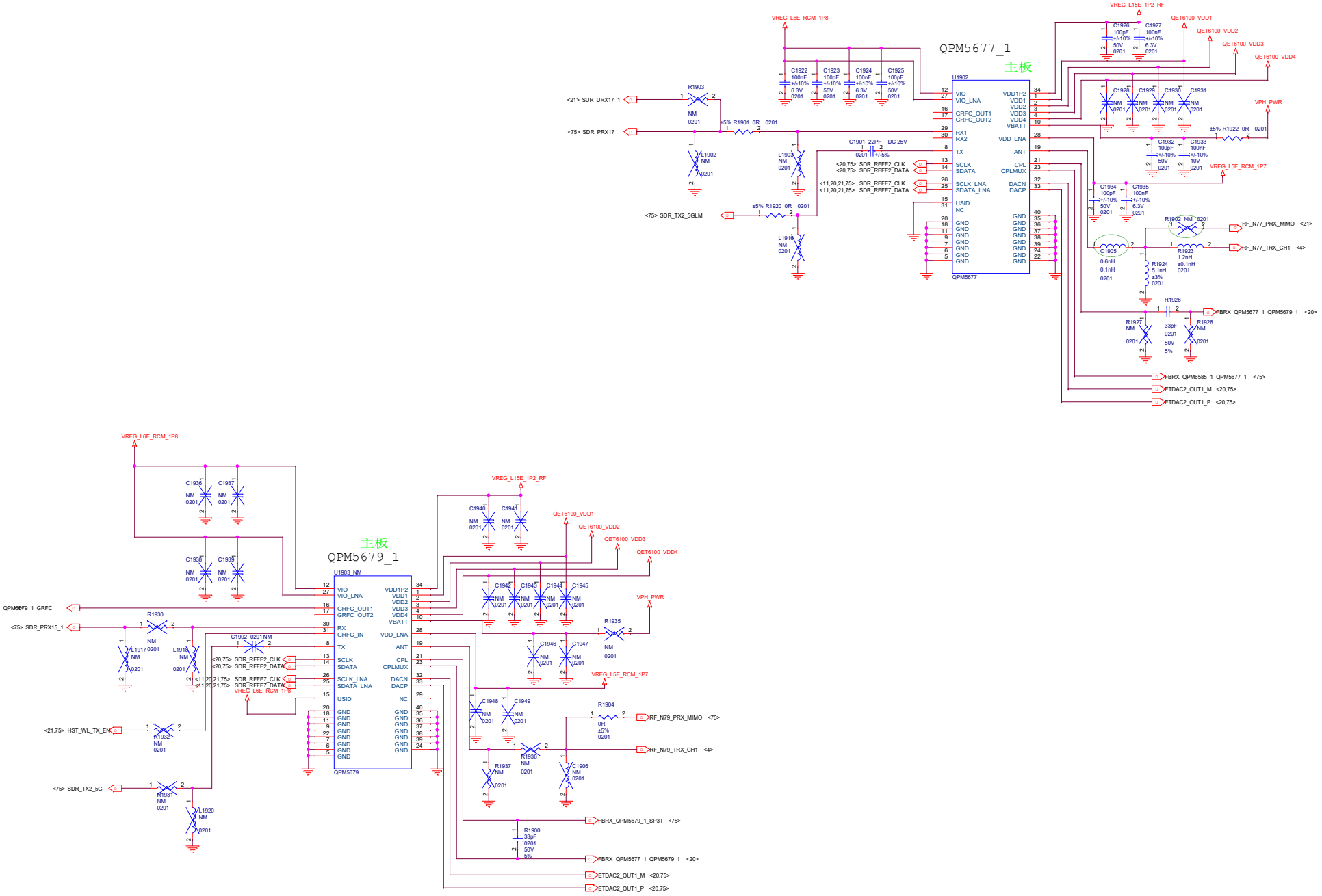

Title	J11 MAIN
Size A2	Document Number Reserved(for 5G-WTR P)
Date: Monday, December 23, 2019	Sheet

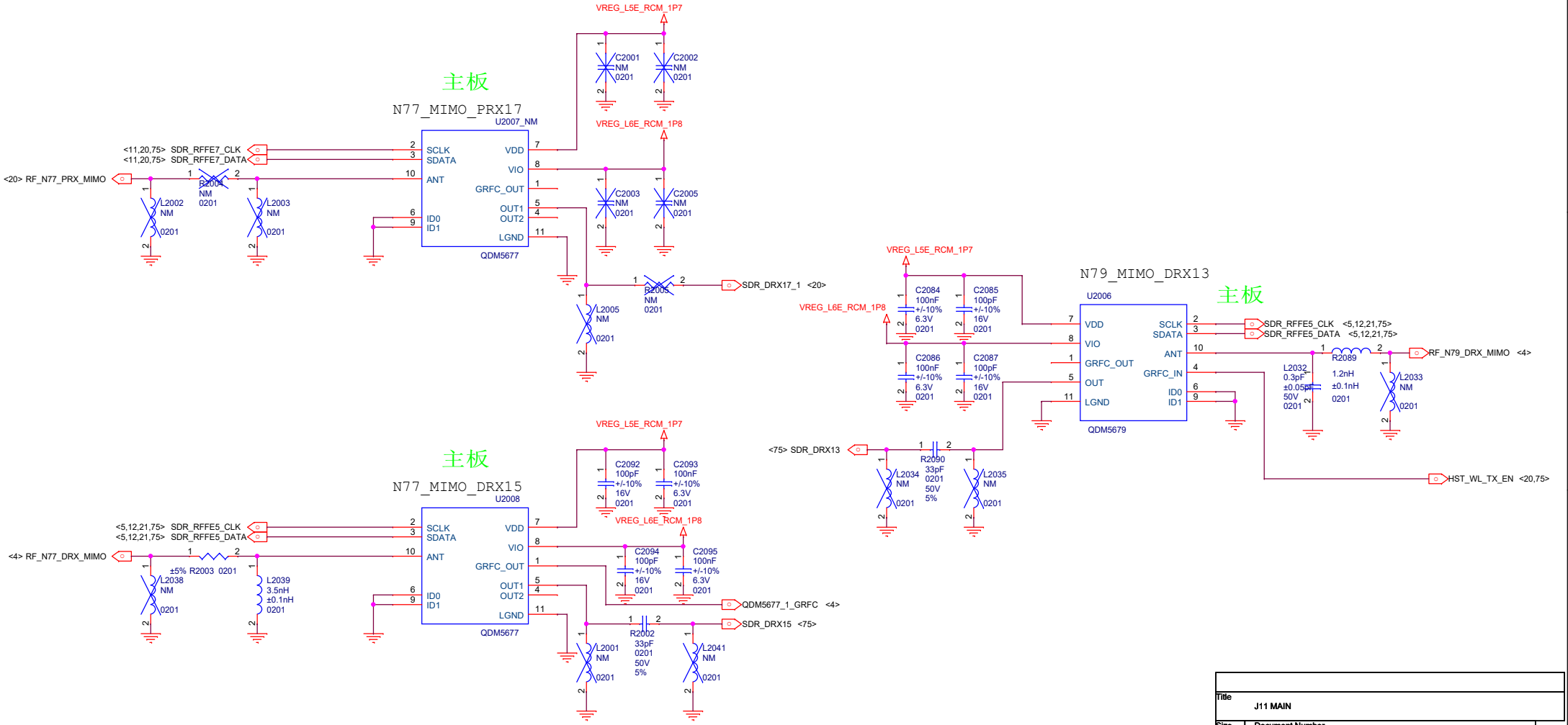

Title	J11 MAIN
Size A3	Document Number Reserved(for 5G-DC/DC)
Date: Monday, December 23, 2019	Sheet 21 74

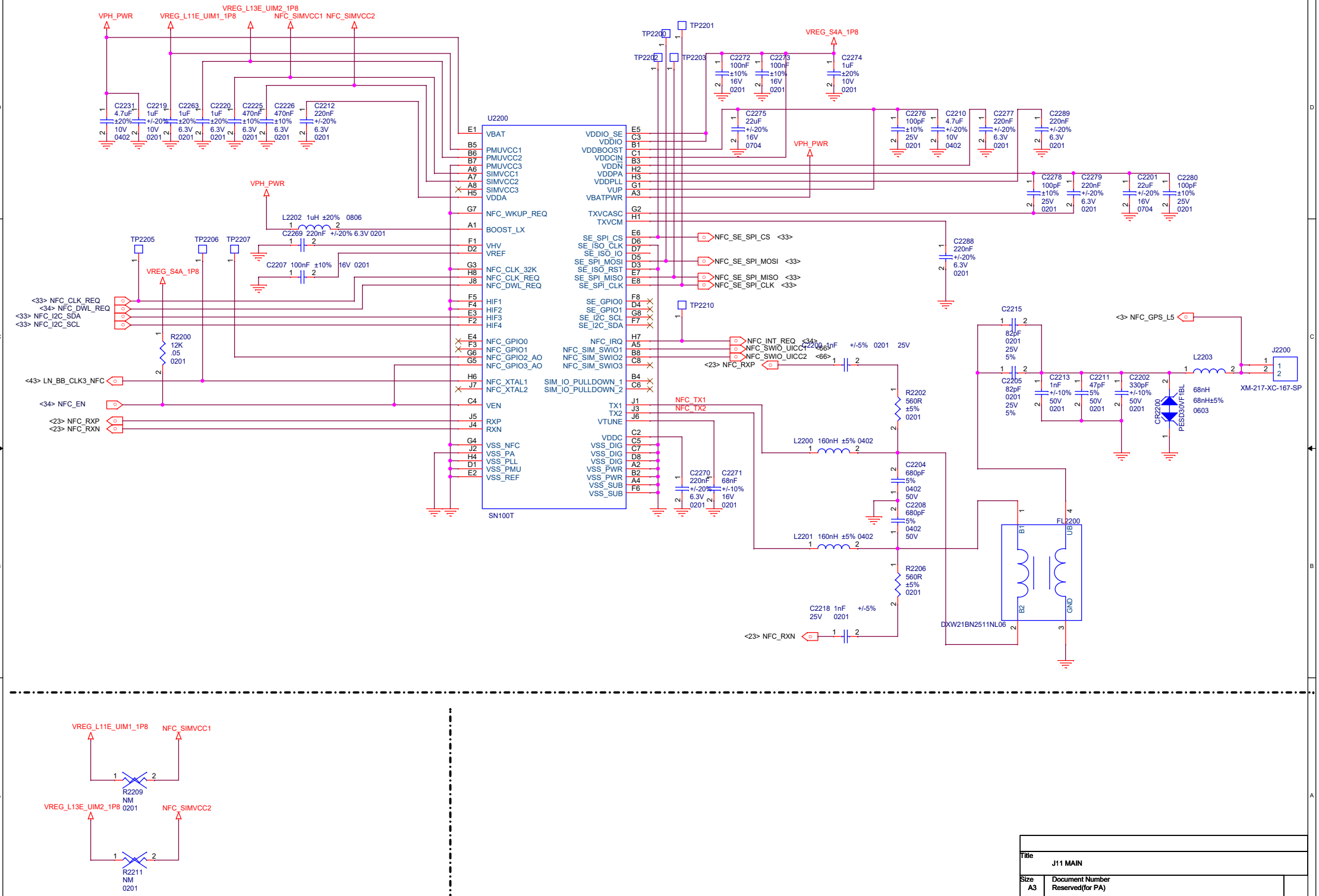

Title	J11 MAIN
Size A3	Document Number Reserved(for PA)
Date: Monday, December 23, 2019	Sheet

We use current SM8250 symbol as LP5 PKG, and it can be compatible with LP4x PKG

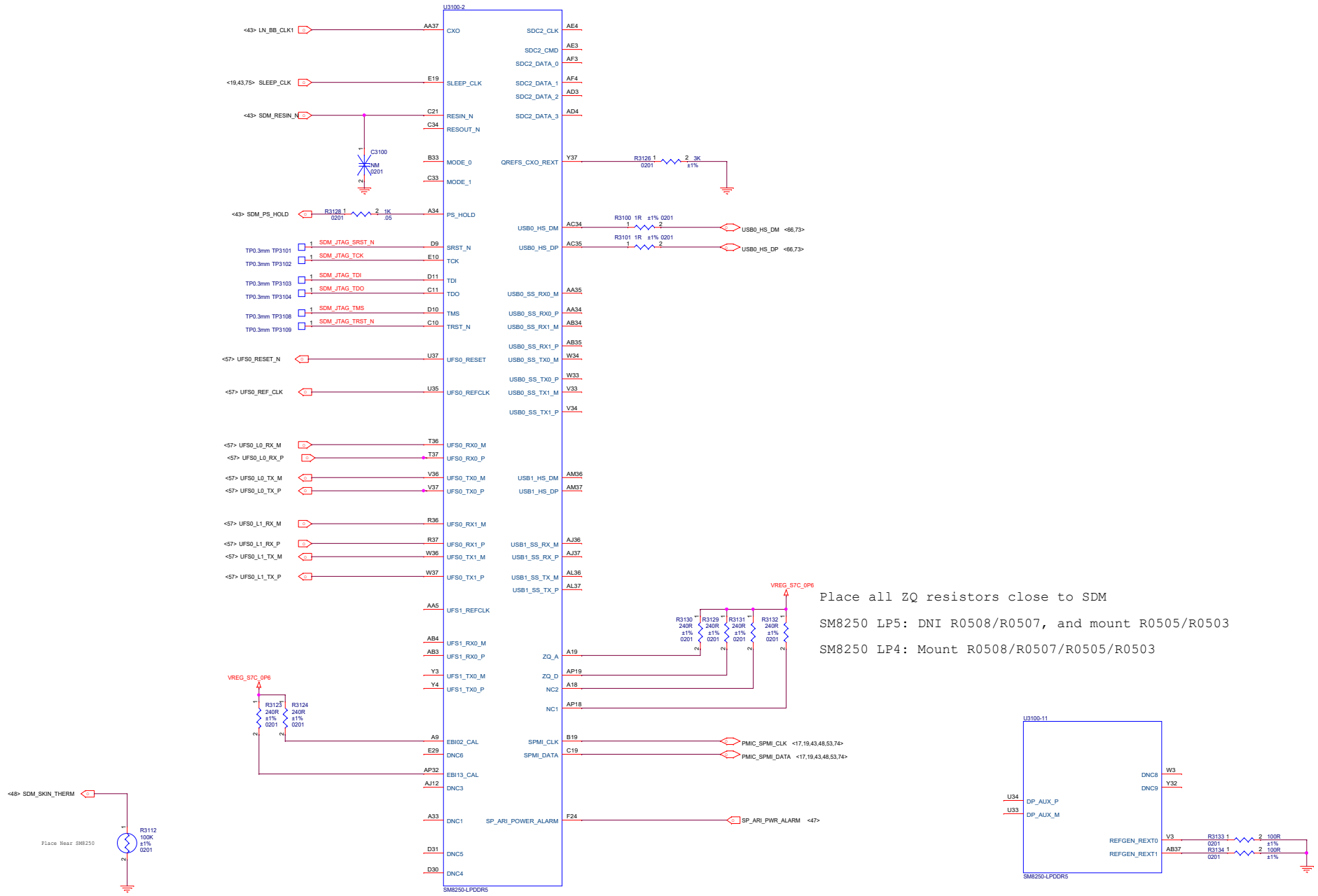

Place all ZQ resistors close to SDM

SM8250 LP5: DNI R0508/R0507, and mount R0505/R0503

SM8250 LP4: Mount R0508/R0507/R0505/R0503

Title	J11 MAIN
Size A2	Document Number SDM855 Control
Date: Monday, December 23, 2019	Sheet

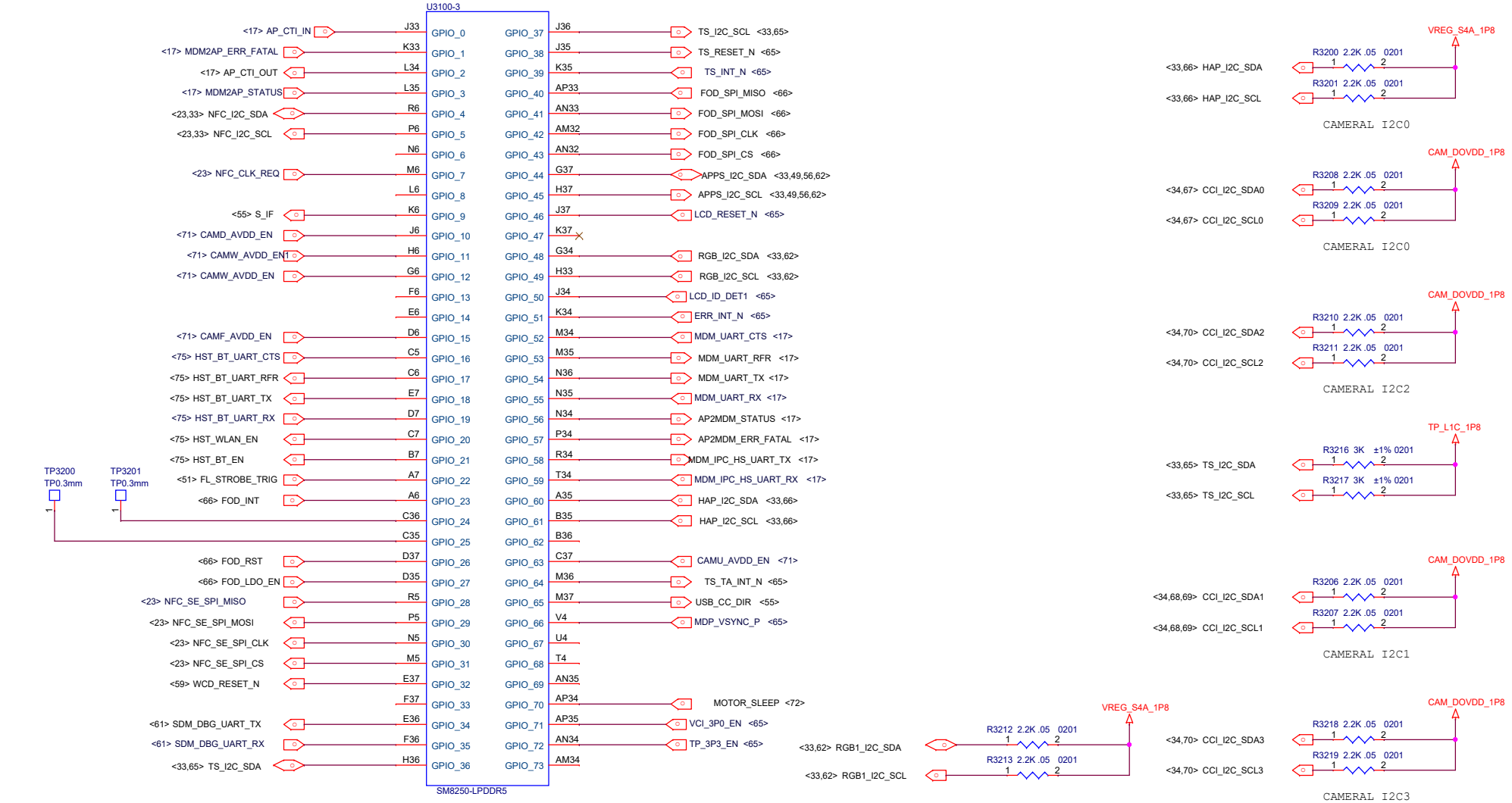

Note: External pulls or logic high on BOOT_CONFIG [4:1] (GPIOs - 27, 47, 76 and 90)
before RESOUT_N getting asserted high can force SM8250 device to boot from an unintended boot device.

Title	J11 MAIN
Size A3	Document Number SDM855 GPIO-1
Date: Monday, December 23, 2019	Sheet 33 of 74

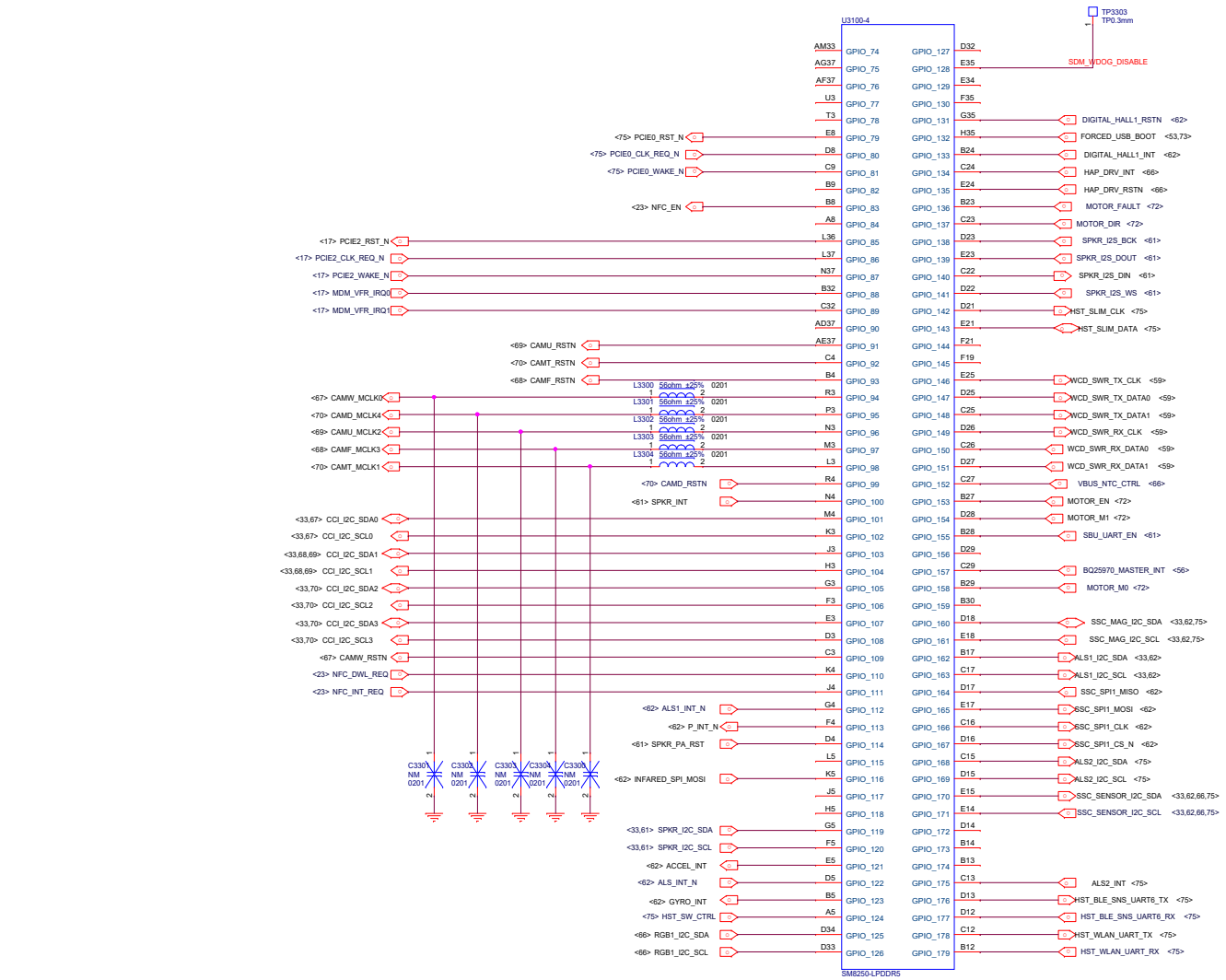

GPIO_128	BOOT_CONFIG(0)	WDOG_DISABLE
GPIO_27	BOOT_CONFIG(1)	FASTBOOT_SEL(0)
GPIO_47	BOOT_CONFIG(2)	FASTBOOT_SEL(1)
GPIO_76	BOOT_CONFIG(3)	FASTBOOT_SEL(2)
GPIO_90	BOOT_CONFIG(4)	FASTBOOT_SEL(3)
GPIO_70	BOOT_CONFIG(5)	APPS_BOOT_FROM_ROM
GPIO_132	N/A	FORCE_USB_BOOT

Title: J11 MAIN

Size: A2

Document Number: SDM855 GPIO-2

Date: Monday, December 23, 2019

Sheet

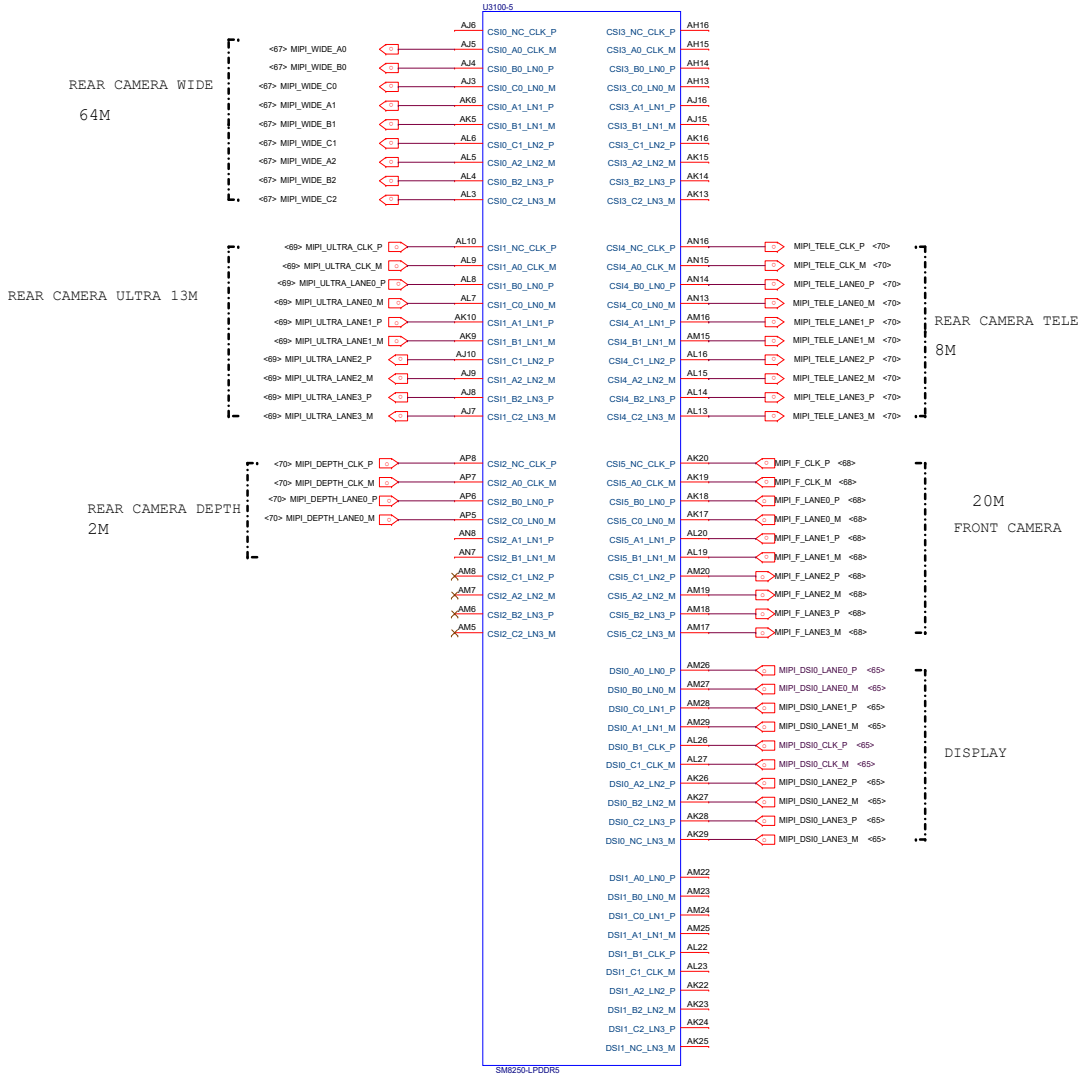

Title	J11 MAIN
Size A2	Document Number SDM855 MIPI
Date: Monday, December 23, 2019	Sheet

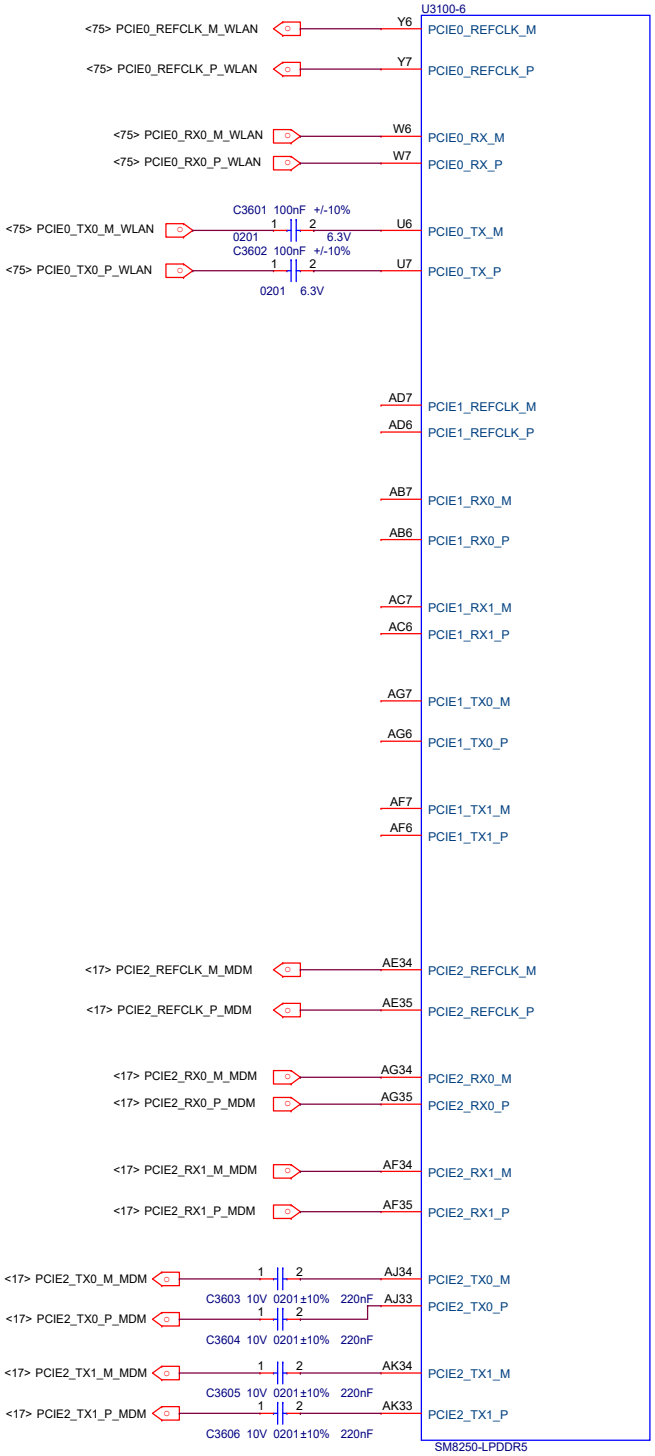

Title	J11 MAIN
Size A3	Document Number SDM855 RF INTF
Date: Monday, December 23, 2019	Sheet 37 74

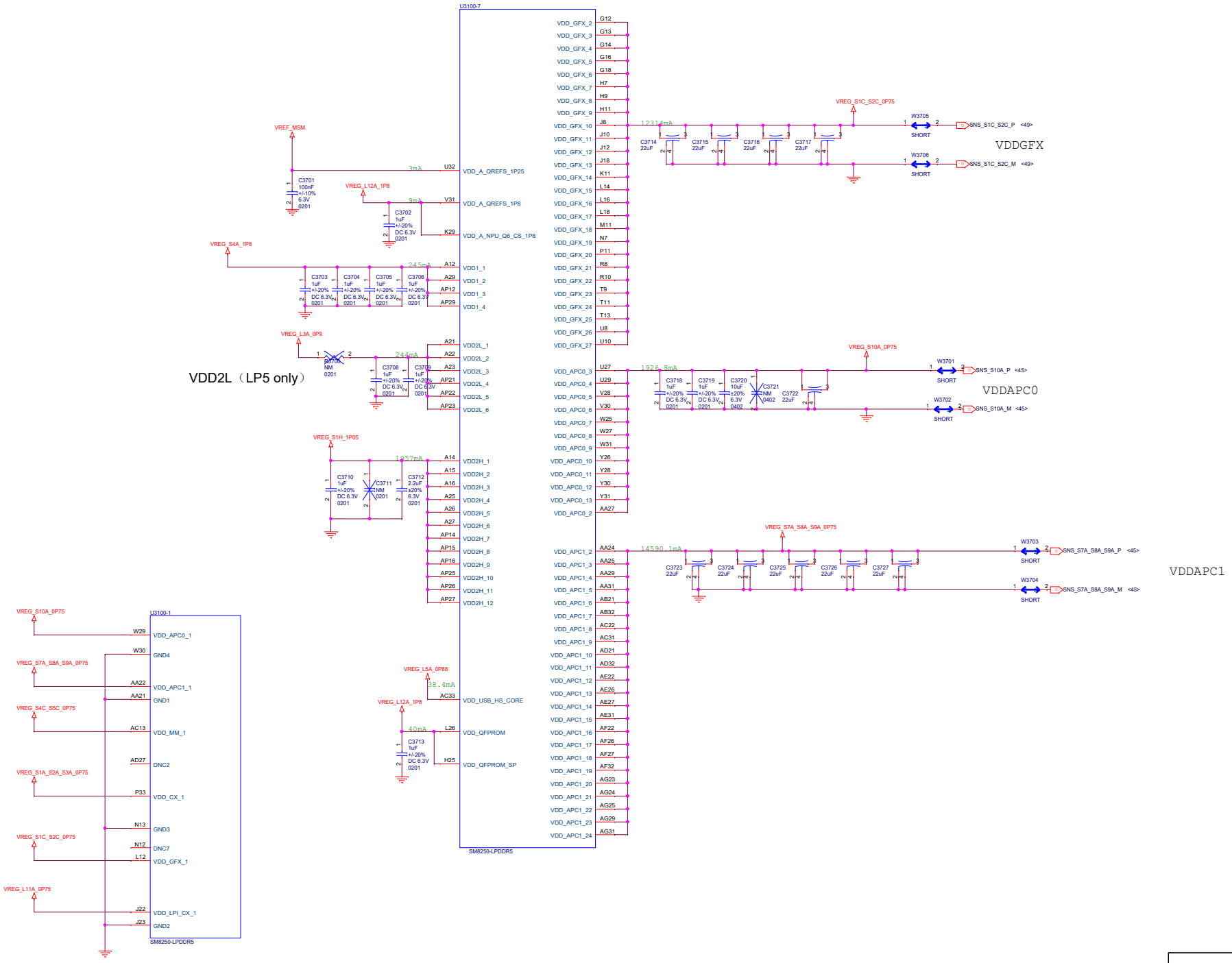
U3100-7
SM8250-LPDDR5
VDD_A_QREFS_1P25
VDD_A_QREFS_1P8
VDD_A_NPU_Q6_CS_1P8
VDD1_1
VDD1_2
VDD1_3
VDD1_4
VDD2L_1
VDD2L_2
VDD2L_3
VDD2L_4
VDD2L_5
VDD2L_6
VDD2H_1
VDD2H_2
VDD2H_3
VDD2H_4
VDD2H_5
VDD2H_6
VDD2H_7
VDD2H_8
VDD2H_9
VDD2H_10
VDD2H_11
VDD2H_12
VDD_USB_HS_CORE
VDD_QFPROM
VDD_QFPROM_SP
VDD_GFX_2
VDD_GFX_3
VDD_GFX_4
VDD_GFX_5
VDD_GFX_6
VDD_GFX_7
VDD_GFX_8
VDD_GFX_9
VDD_GFX_10
VDD_GFX_11
VDD_GFX_12
VDD_GFX_13
VDD_GFX_14
VDD_GFX_15
VDD_GFX_16
VDD_GFX_17
VDD_GFX_18
VDD_GFX_19
VDD_GFX_20
VDD_GFX_21
VDD_GFX_22
VDD_GFX_23
VDD_GFX_24
VDD_GFX_25
VDD_GFX_26
VDD_GFX_27
VDD_APC0_3
VDD_APC0_4
VDD_APC0_5
VDD_APC0_6
VDD_APC0_7
VDD_APC0_8
VDD_APC0_9
VDD_APC0_10
VDD_APC0_11
VDD_APC0_12
VDD_APC0_13
VDD_APC0_2
VDD_APC1_2
VDD_APC1_3
VDD_APC1_4
VDD_APC1_5
VDD_APC1_6
VDD_APC1_7
VDD_APC1_8
VDD_APC1_9
VDD_APC1_10
VDD_APC1_11
VDD_APC1_12
VDD_APC1_13
VDD_APC1_14
VDD_APC1_15
VDD_APC1_16
VDD_APC1_17
VDD_APC1_18
VDD_APC1_19
VDD_APC1_20
VDD_APC1_21
VDD_APC1_22
VDD_APC1_23
VDD_APC1_24
VREF_MSM
VREG_L12A_1P8
VREG_S4A_1P8
VREG_L3A_0P9
VREG_S1H_1P05
VREG_L5A_0P88
VREG_S1C_S2C_0P75
VREG_S10A_0P75
VREG_S7A_S8A_S9A_0P75
3mA
9mA
245mA
244mA
1957mA
38.4mA
40mA
12314mA
1926.8mA
14590.1mA
C3701 100nF +/-10% 6.3V 0201
C3702 1uF +/-20% DC 6.3V 0201
C3703 1uF +/-20% DC 6.3V 0201
C3704 1uF +/-20% DC 6.3V 0201
C3705 1uF +/-20% DC 6.3V 0201
C3706 1uF +/-20% DC 6.3V 0201
C3708 1uF +/-20% DC 6.3V 0201
C3709 1uF +/-20% DC 6.3V 0201
C3710 1uF +/-20% DC 6.3V 0201
C3711 NM 0201
C3712 2.2uF ±20% 6.3V 0201
C3713 1uF +/-20% DC 6.3V 0201
C3714 22uF
C3715 22uF
C3716 22uF
C3717 22uF
C3718 1uF +/-20% DC 6.3V 0201
C3719 1uF +/-20% DC 6.3V 0201
C3720 10uF ±20% 6.3V 0402
C3721 NM 0402
C3722 22uF
C3723 22uF
C3724 22uF
C3725 22uF
C3726 22uF
C3727 22uF
W3705 SHORT
W3706 SHORT
W3701 SHORT
W3702 SHORT
W3703 SHORT
W3704 SHORT
SNS_S1C_S2C_P <49>
SNS_S1C_S2C_M <49>
SNS_S10A_P <45>
SNS_S10A_M <45>
SNS_S7A_S8A_S9A_P <45>
SNS_S7A_S8A_S9A_M <45>
VDDGFX
VDDAPC0
VDDAPC1
VDD2L（LP5 only）
U3100-1
SM8250-LPDDR5
W29 VDD_APC0_1
W30 GND4
AA22 VDD_APC1_1
AA21 GND1
AC13 VDD_MM_1
AD27 DNC2
P33 VDD_CX_1
N13 GND3
N12 DNC7
L12 VDD_GFX_1
J22 VDD_LPI_CX_1
J23 GND2
Title J11 MAIN
Size A2
Document Number SDM855 PWR1
Date: Monday, December 23, 2019
Sheet

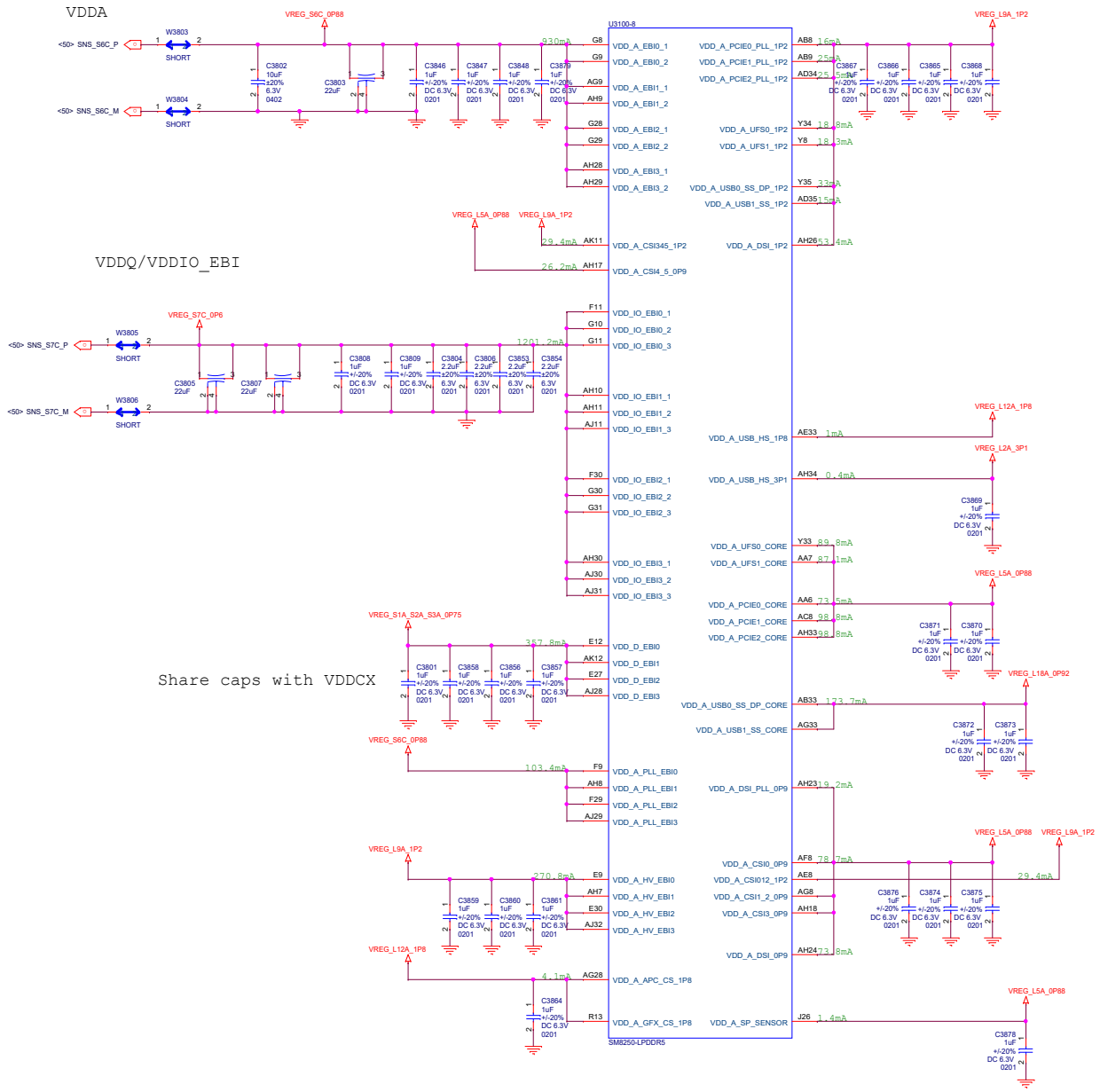

Title	J11 MAIN
Size A2	Document Number SDM855 PWR2
Date: Monday, December 23, 2019	Sheet

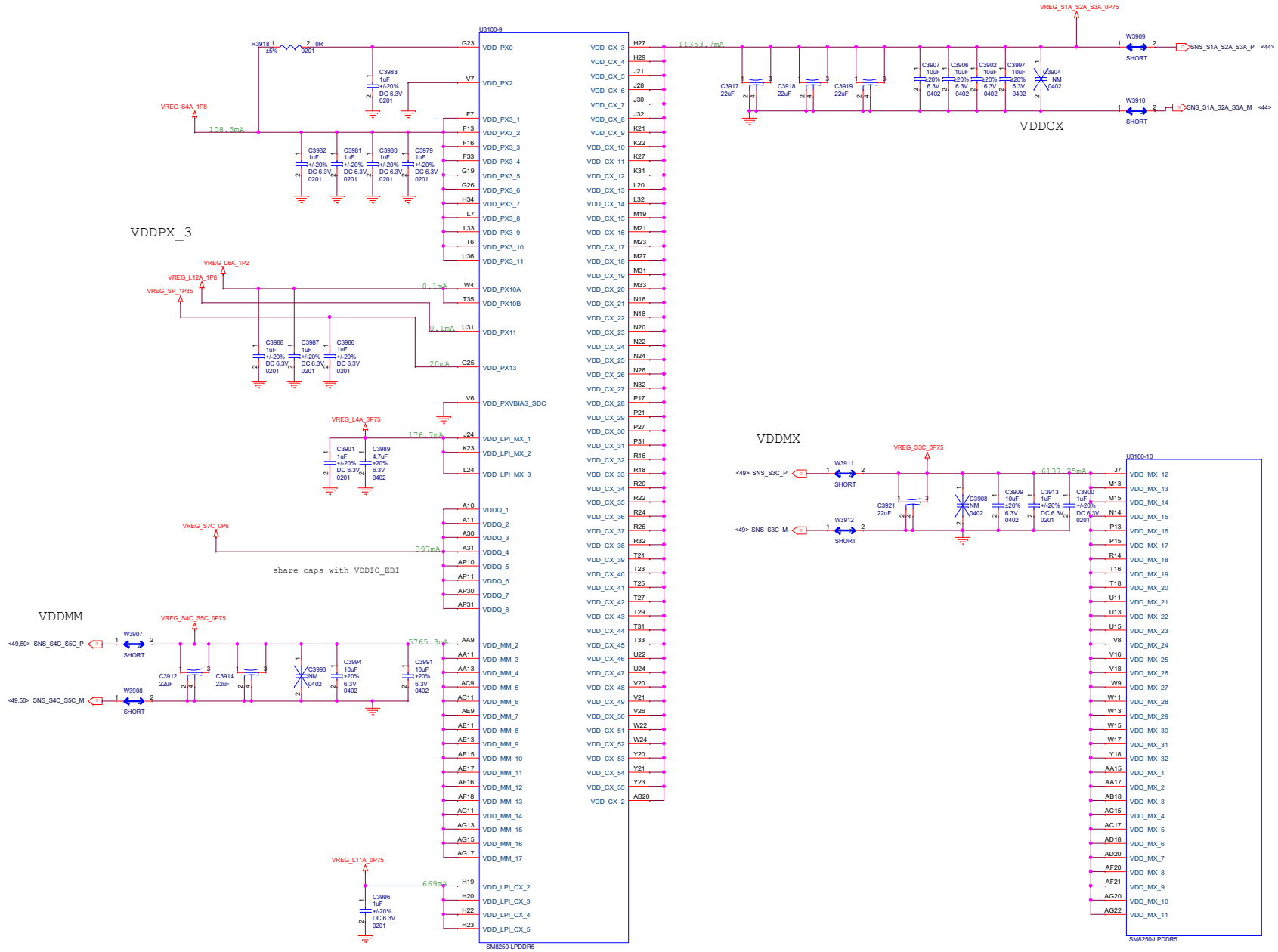

Title	J11 MAIN
Size A2	Document Number SDM855 PWR3
Date: Monday, December 23, 2019	Sheet

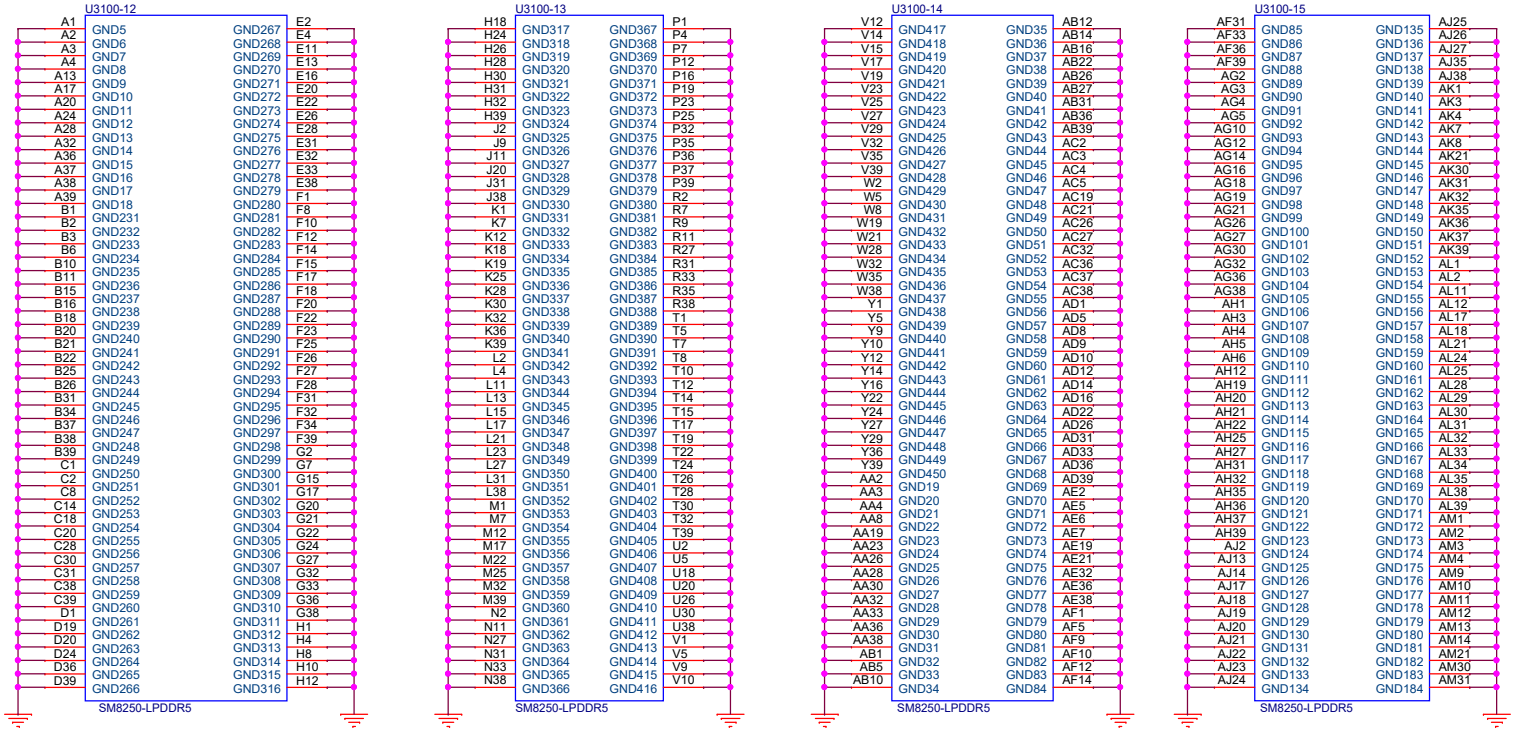

Title	J11 MAIN
Size A3	Document Number SDM855 GND
Date: Monday, December 23, 2019	Sheet

Note: Refer to 80-VP447-10 for XO Layout App Note.

Layout Note:
No trace shall be present in at-least two immediate layers below XTAL.
Route XTAL_IN and XTAL_OUT traces on surface layer only, with length between 3mm and 10mm.

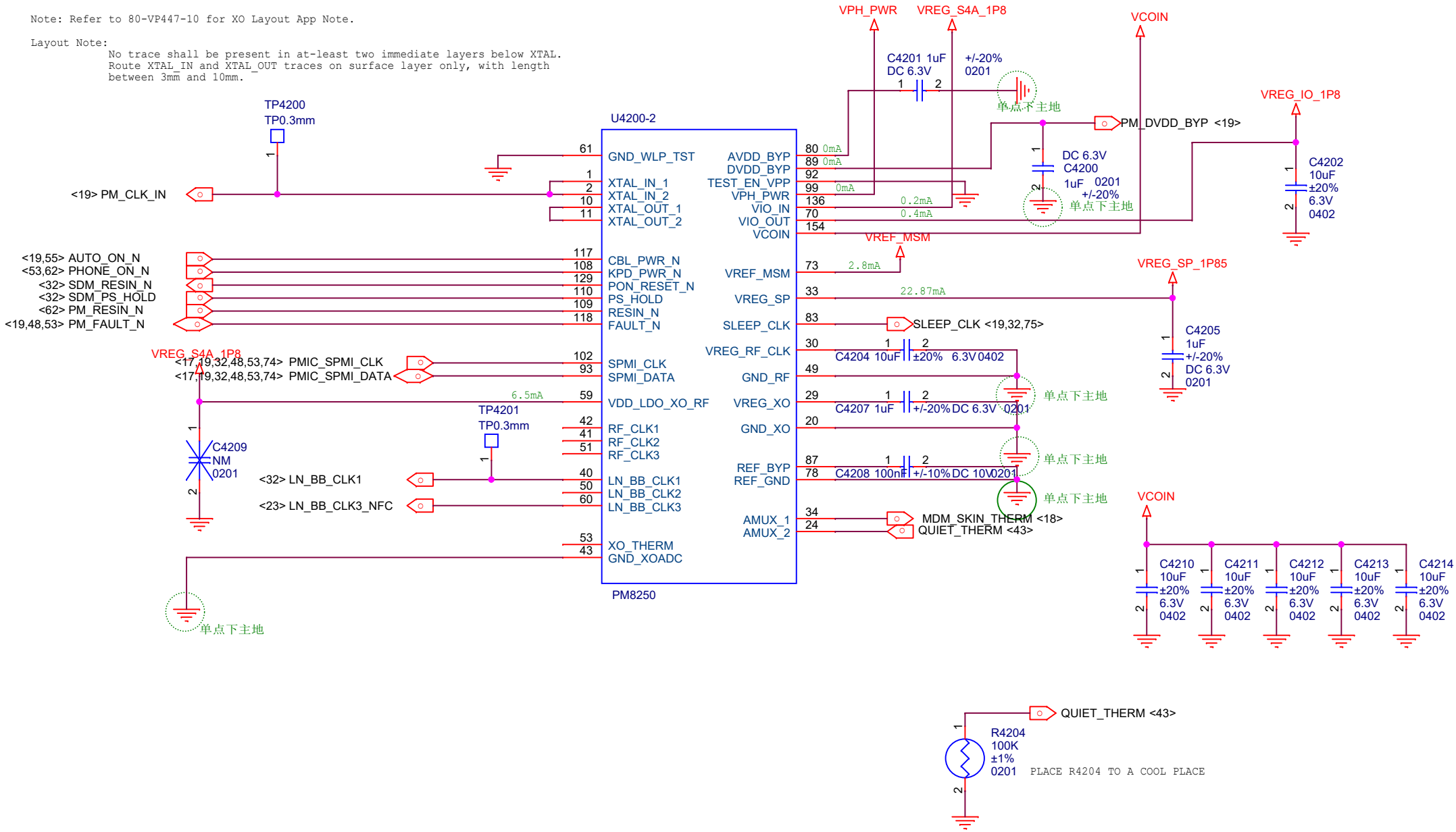

Title	J11 MAIN
Size A4	Document Number PM855 XO&CTRL
Date: Monday, December 23, 2019	Sheet 43 of 74

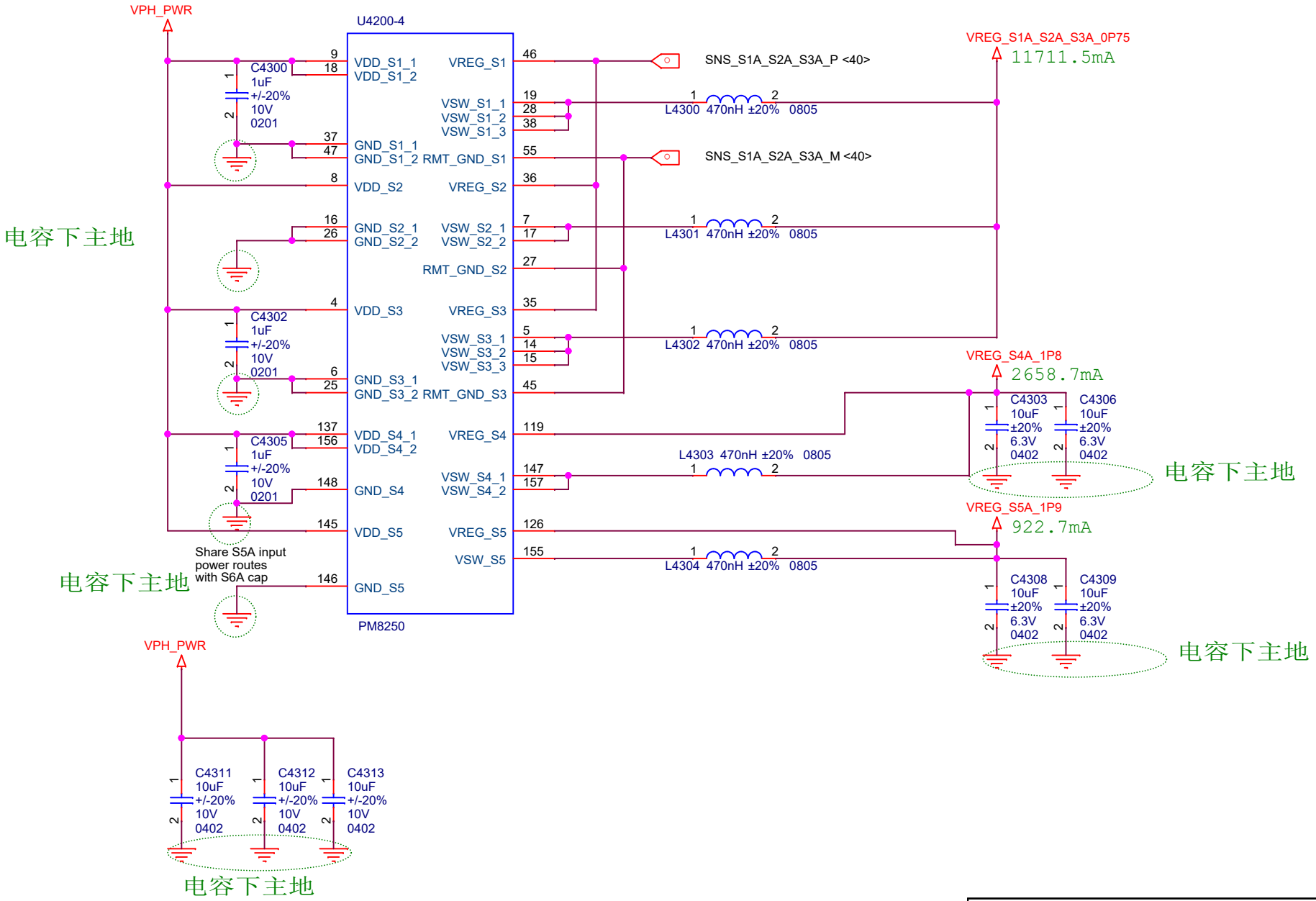

Title	J11 MAIN
Size A4	Document Number PM855 BUCK CONVERTER1
Date: Monday, December 23, 2019	Sheet 44 of

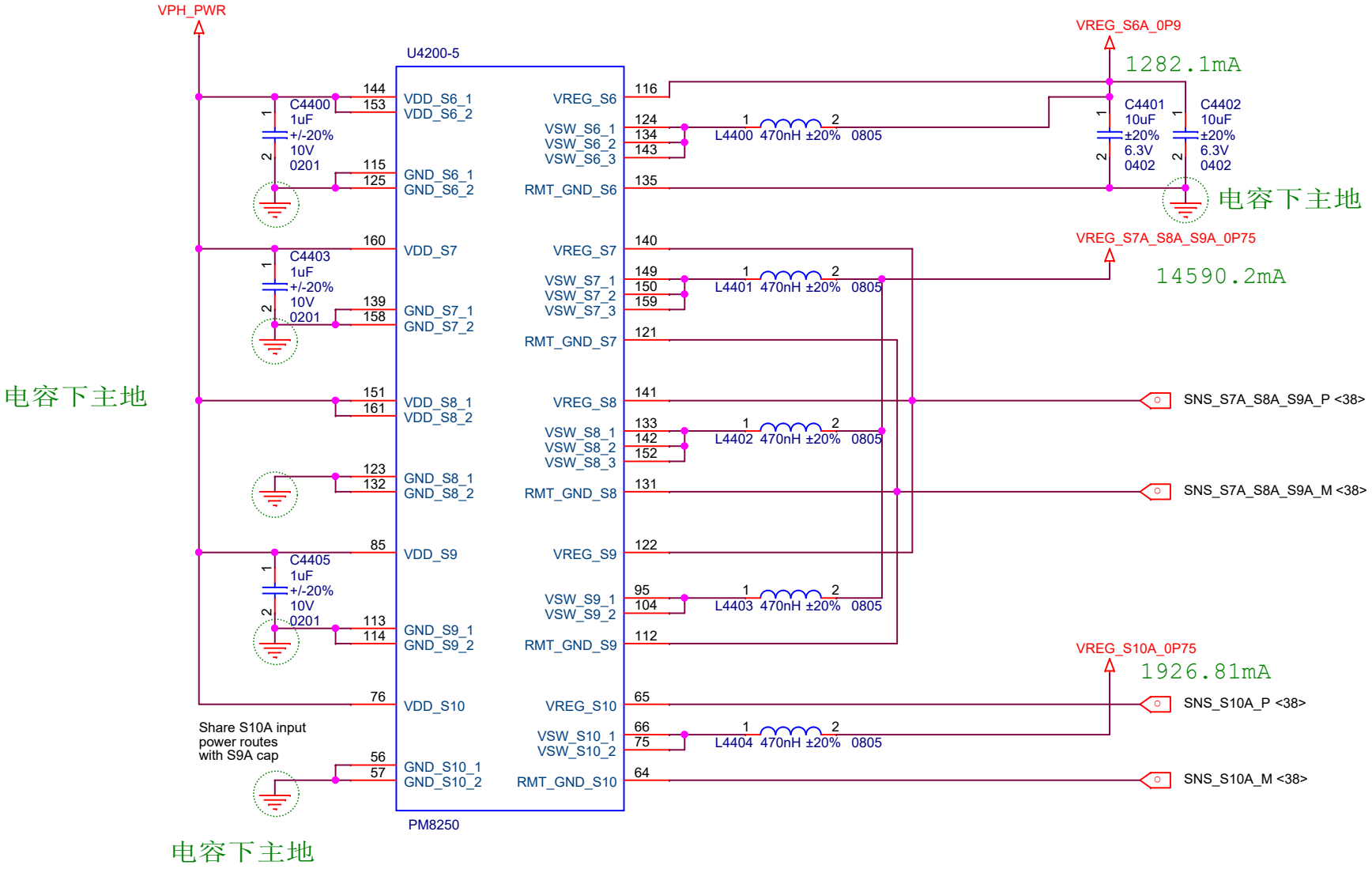

Title	J11 MAIN	
Size A4	Document Number PM855 BUCK CONVERTER2	P0
Date: Monday, December 23, 2019	Sheet 45 of 74	

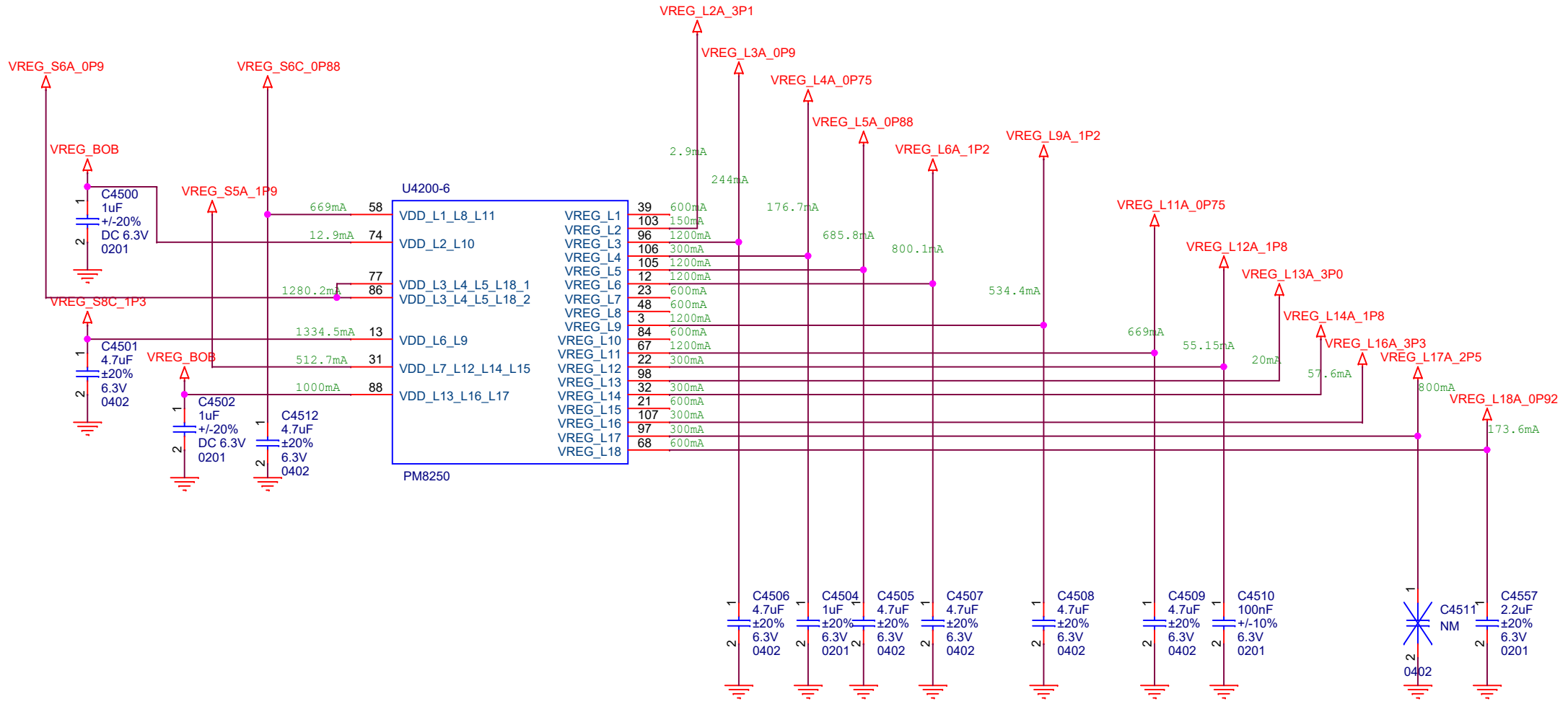

Pseudo capless allows users to place the LDO output capacitor physically/electrically far from the LDO output, near the load. The routing ESL/ESR between the PMIC pin and the remote Cout should meet the capless LDO spec.
All PMOS LDOs are considered pseudo-capless, unless it has internal PMIC load. If an internal PMIC load, the output cap must be placed close to the PMIC.
Required capacitance for each LDO type can be found in App Note: 80-VT310-125

Title	J11 MAIN	
Size A4	Document Number PM855 LDOs	
Date: Monday, December 23, 2019	Sheet 46 of 74	

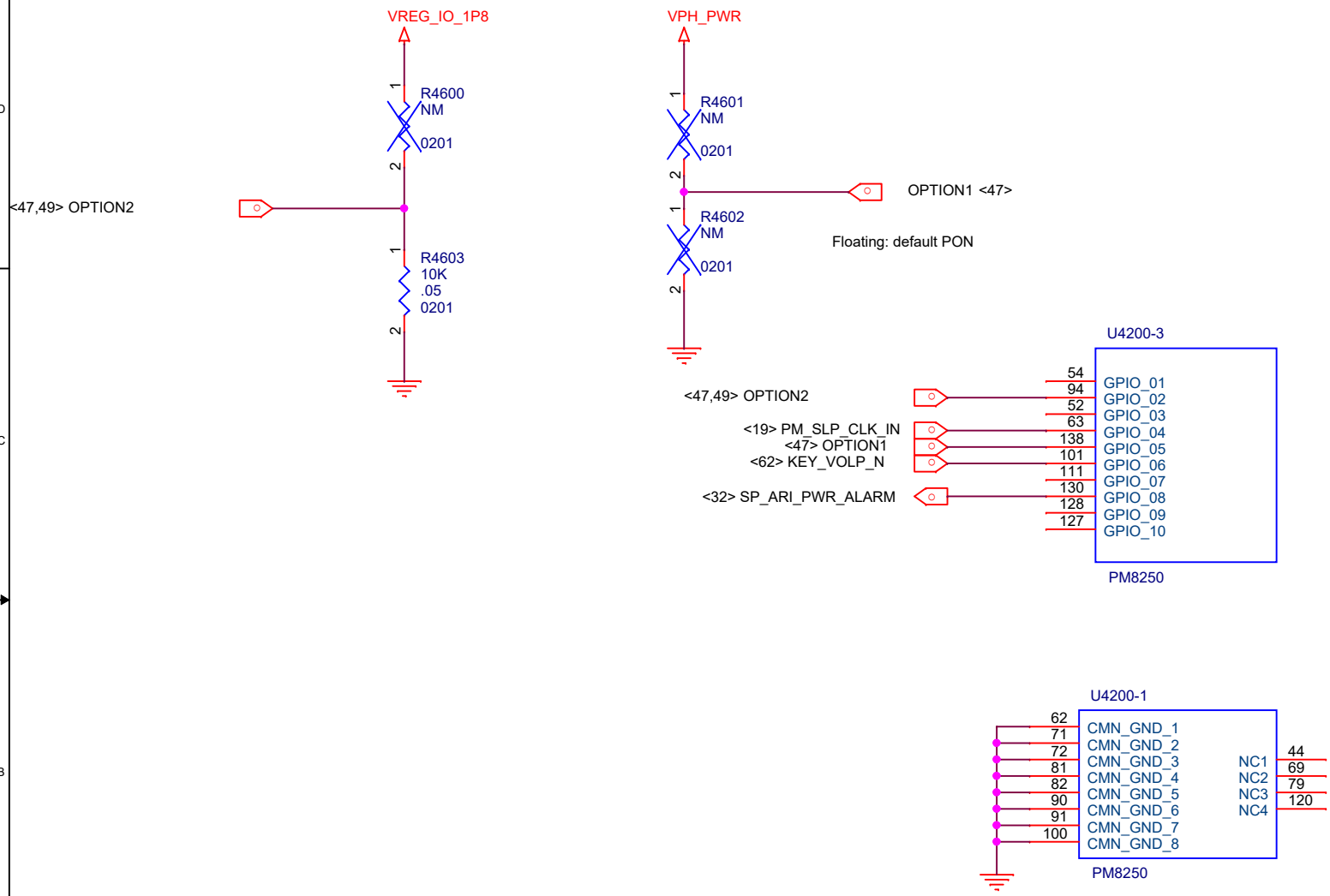

Title	J11 MAIN
Size A4	Document Number PM855 GPIO&GND
Date: Monday, December 23, 2019	Sheet

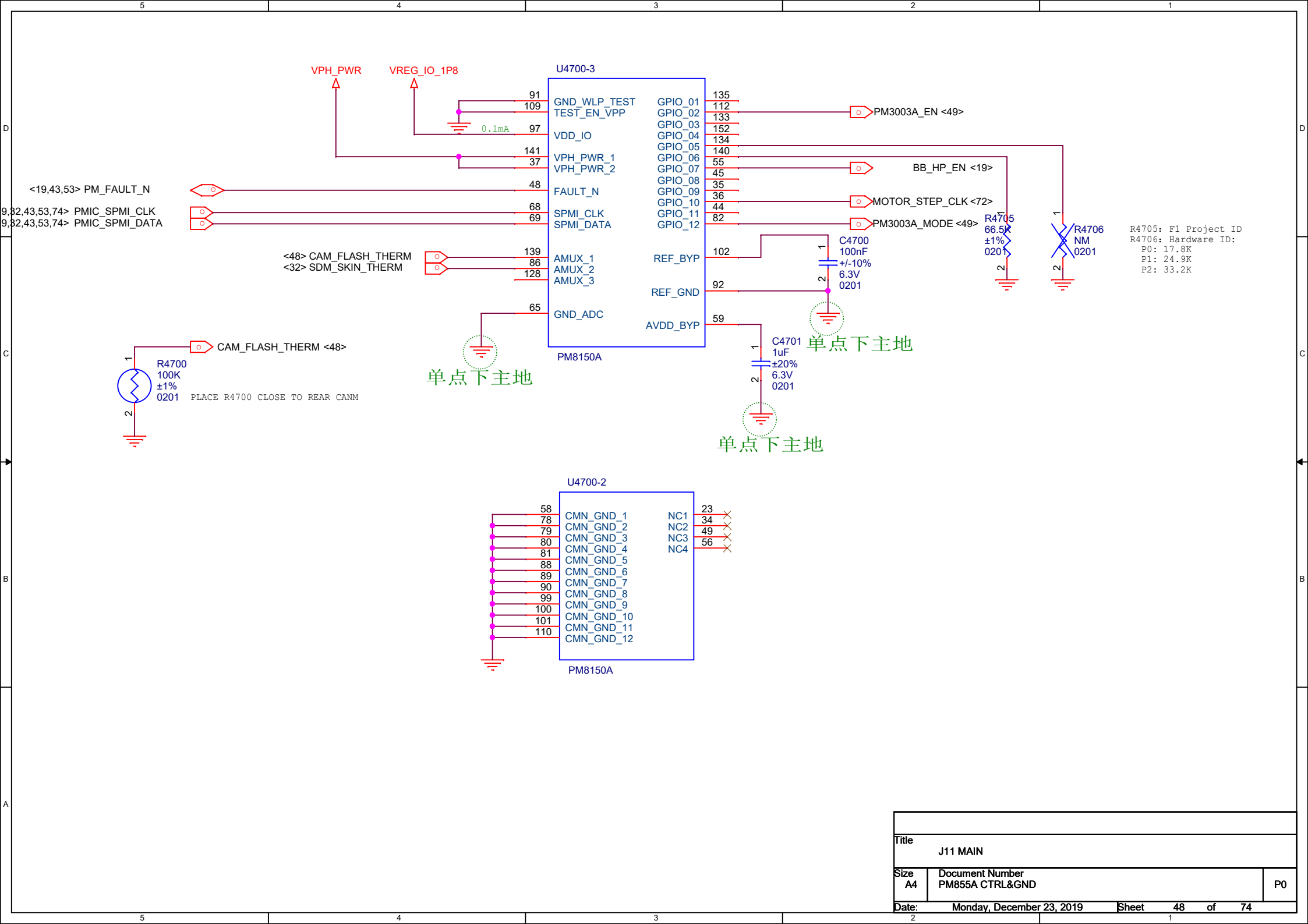

Title	J11 MAIN	
Size A4	Document Number PM855A CTRL&GND	P0
Date: Monday, December 23, 2019	Sheet 48 of 74	

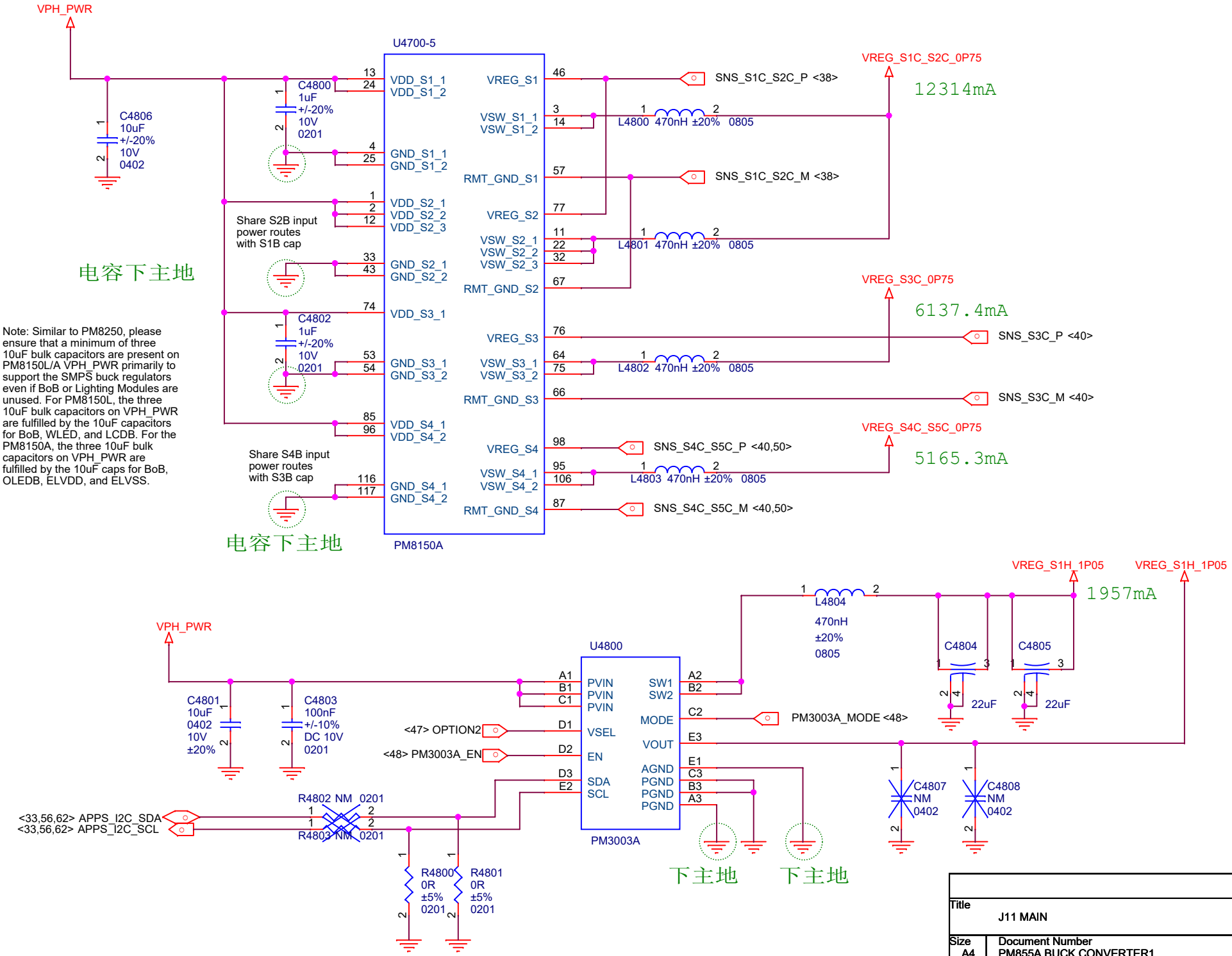

Title	J11 MAIN
Size A4	Document Number PM855A BUCK CONVERTER1
Date: Monday, December 23, 2019	Sheet 49 of 74

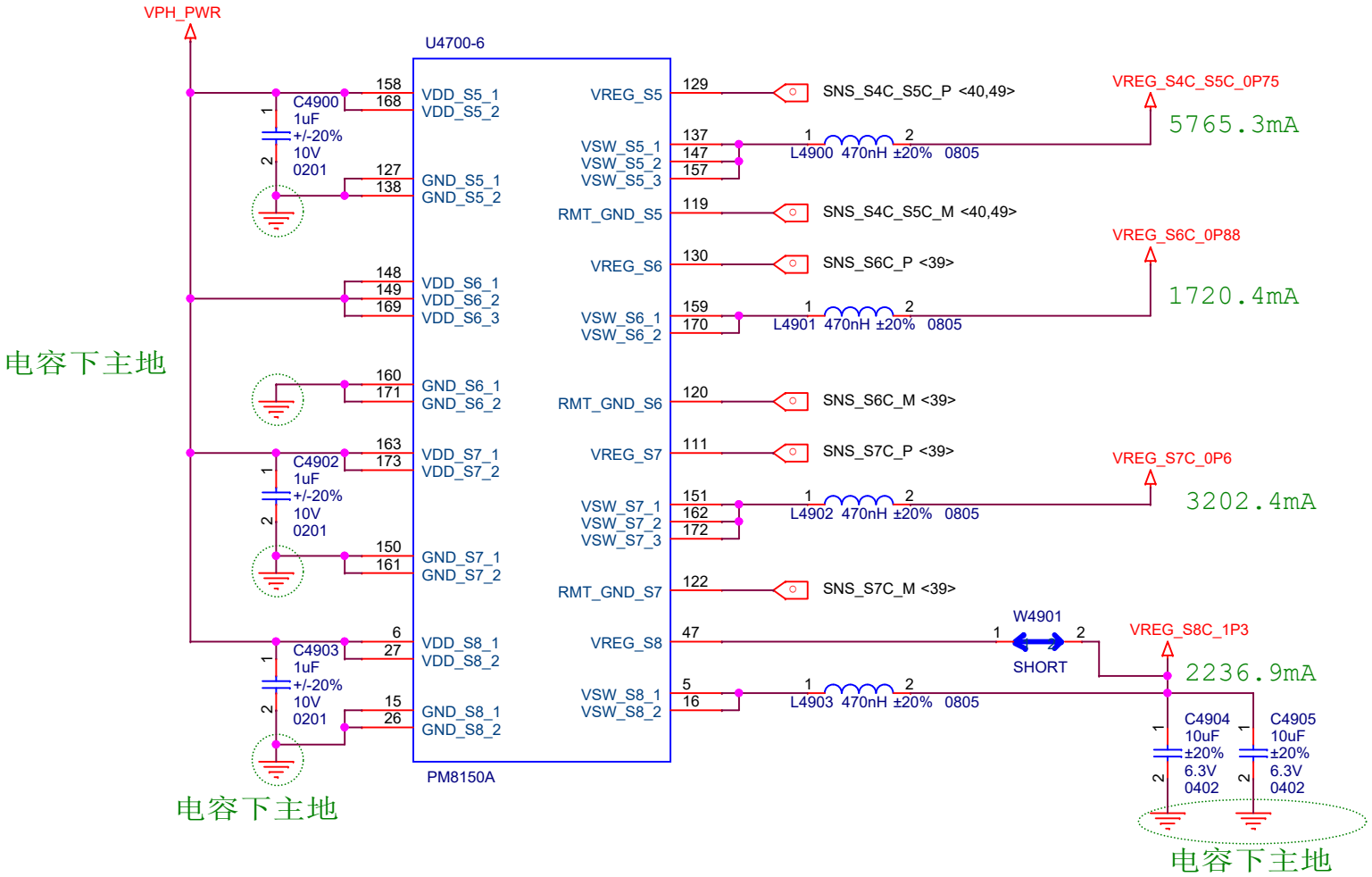

Title	J11 MAIN	
Size A4	Document Number PM855A BUCK CONVERTER2	P0
Date: Monday, December 23, 2019	Sheet 50 of 74	

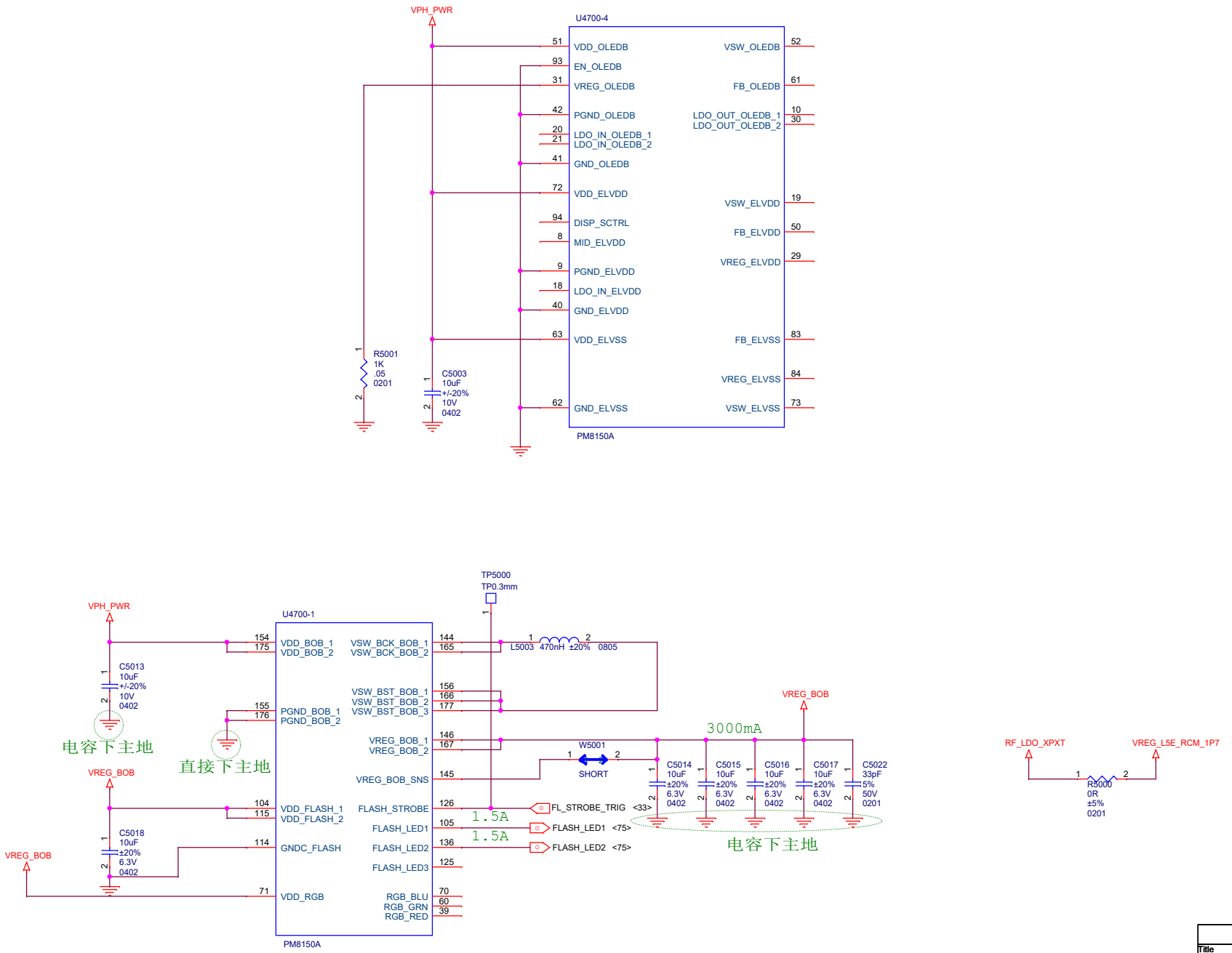

Title	J11 MAIN
Size A3	Document Number PM855A AMOLED&BOB&FLASH
Date: Monday, December 23, 2019	Sheet 51 of 74

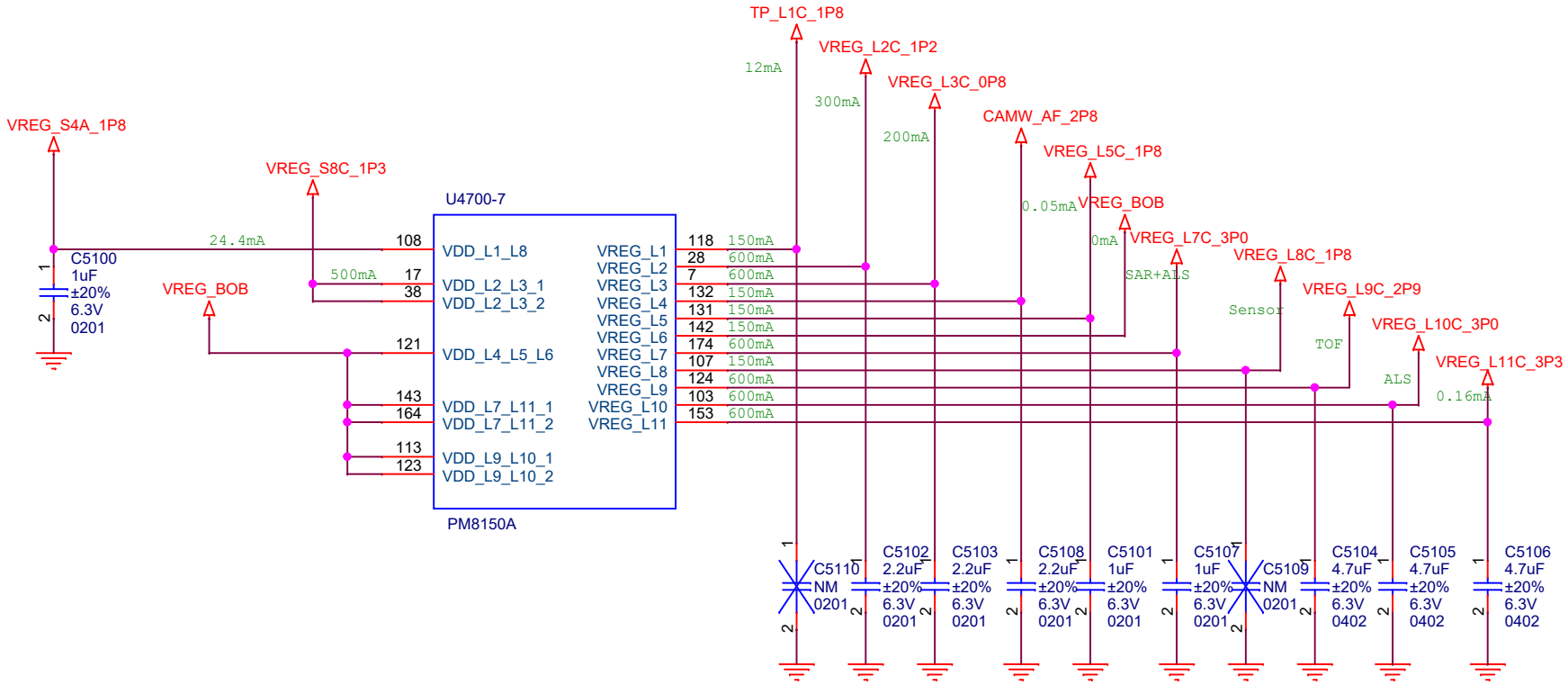

Title	J11 MAIN
Size A4	Document Number PM855A LDOs
Date: Monday, December 23, 2019	Sheet 52 of 74

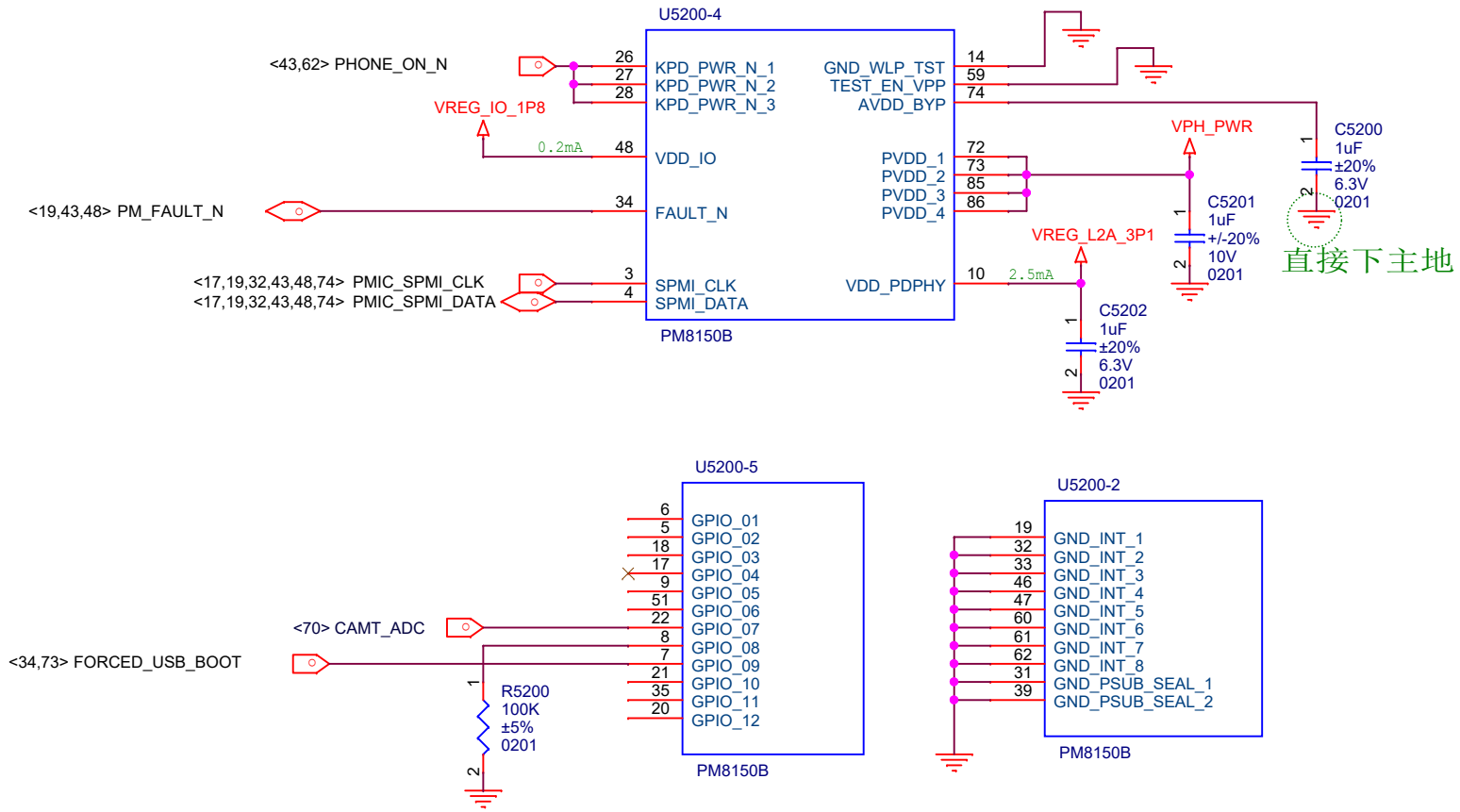

Note: GPIO_04 and GPIO_11 of PM8150B are for internal usage. Keep them float.
Keep GPIO_03 of PM8150B float. Don't use it for other purpose.
GPIO_06 of PM8150B is dedicated for SMB_STAT. Don't use it for other purpose.

Title	J11 MAIN	
Size A4	Document Number PM855B CTRL&GND	
Date: Monday, December 23, 2019	Sheet 53 of 74	

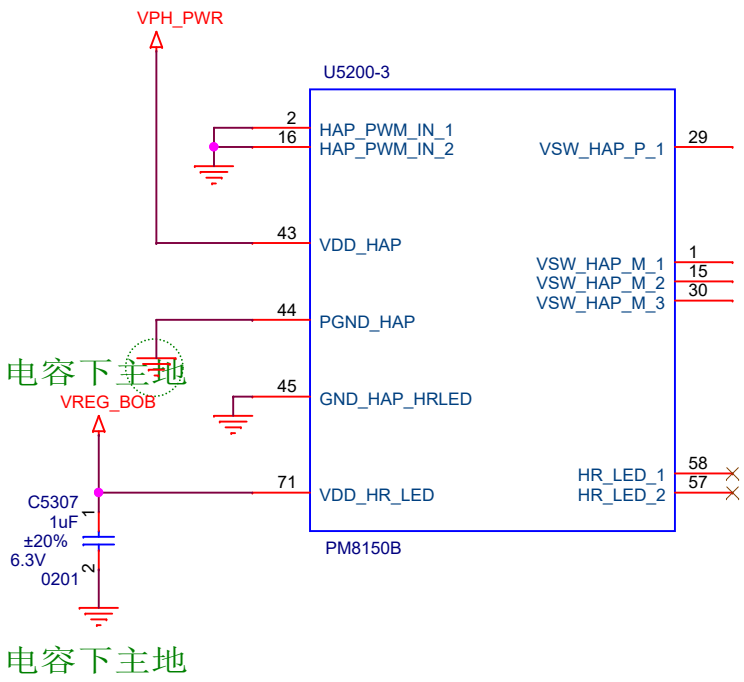

Title	J11 MAIN	
Size A4	Document Number PM855B HAPTIC	
Date: Monday, December 23, 2019	Sheet 54 of 74	

Note:
MID_CHG node needs a total of at least 2x4.7uF 35V cap (total effective capacitance of 5uF at 5V considering voltage derating).
OEMs can also use 1x10uF 35V cap if it meets this total effective capacitance requirement

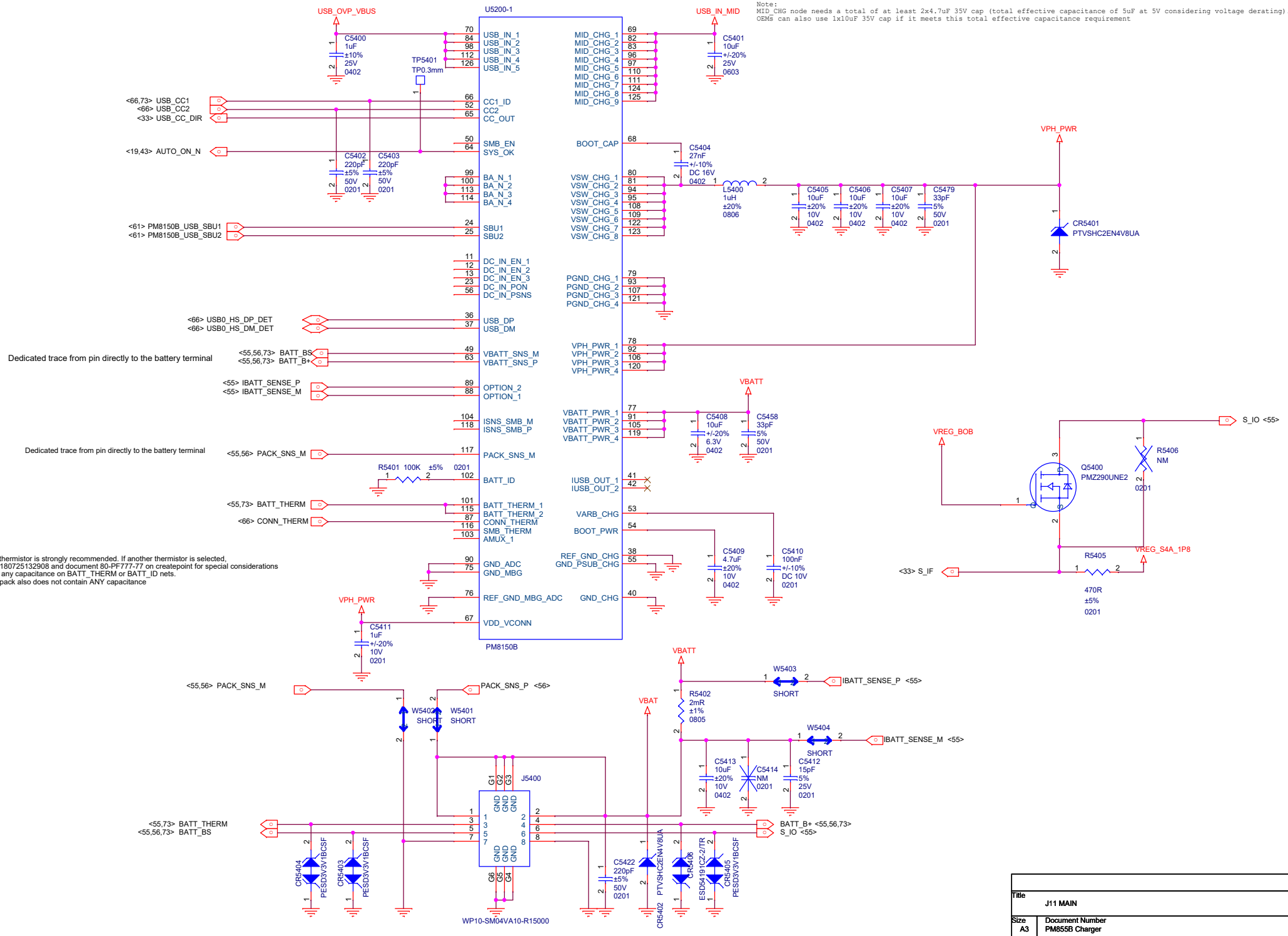

Title	J11 MAIN
Size A3	Document Number PM855B Charger
Date: Monday, December 23, 2019	Sheet

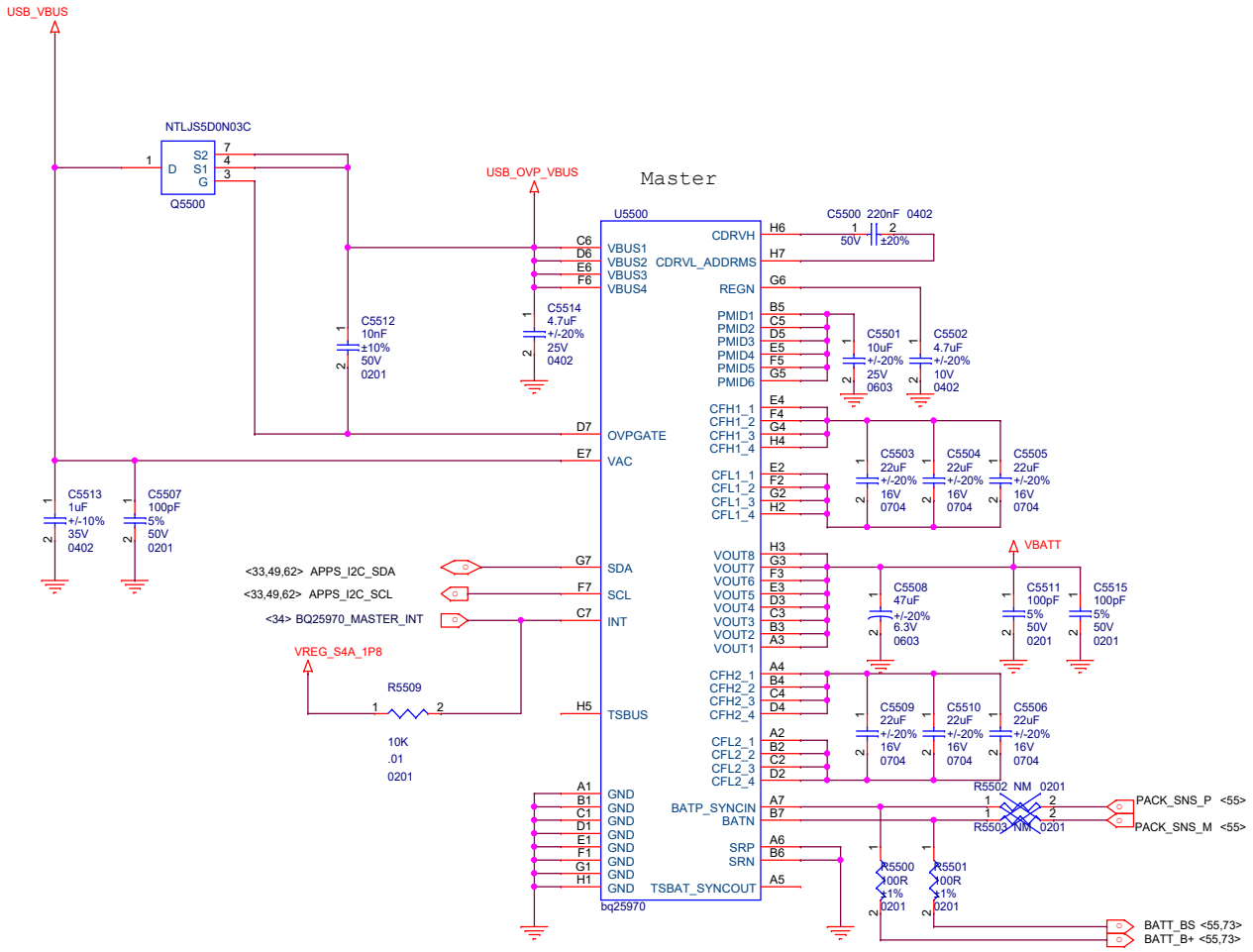

Title	F1 MAIN
Size A3	Document Number SMB1390&WL POWER
Date: Monday, December 23, 2019	Sheet 56 of 74

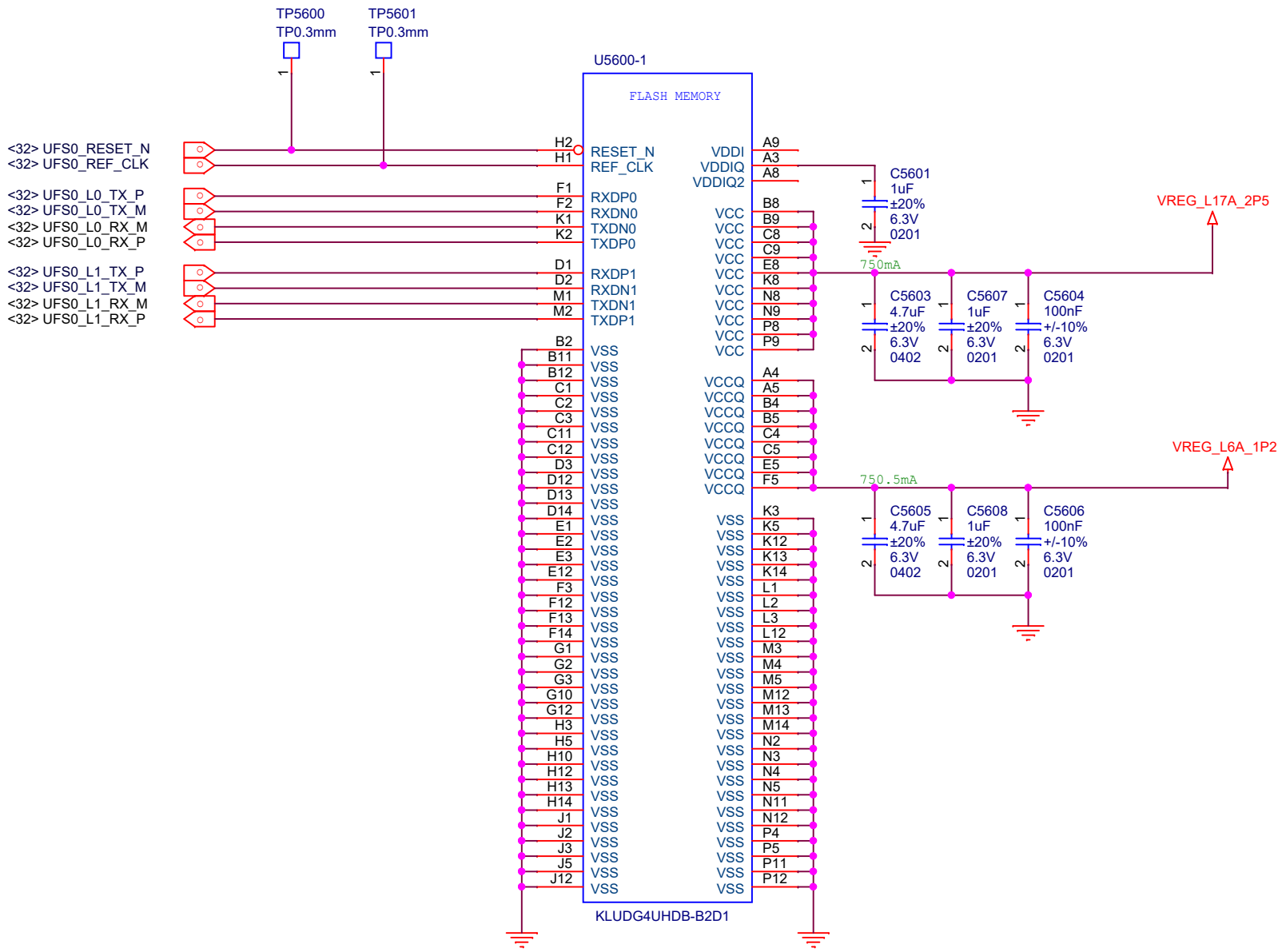

Title	J11 MAIN
Size A4	Document Number MEMORY
Date: Monday, December 23, 2019	Sheet 57 of 74

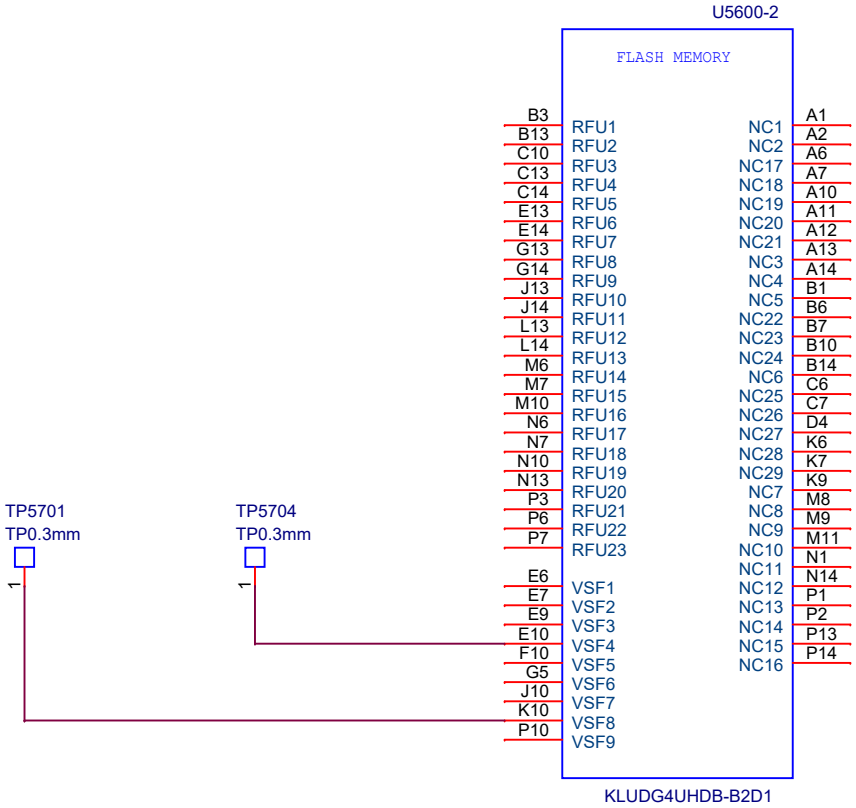

Title	J11 MAIN	
Size A4	Document Number MEMORY-2	
Date: Monday, December 23, 2019	Sheet 58	74

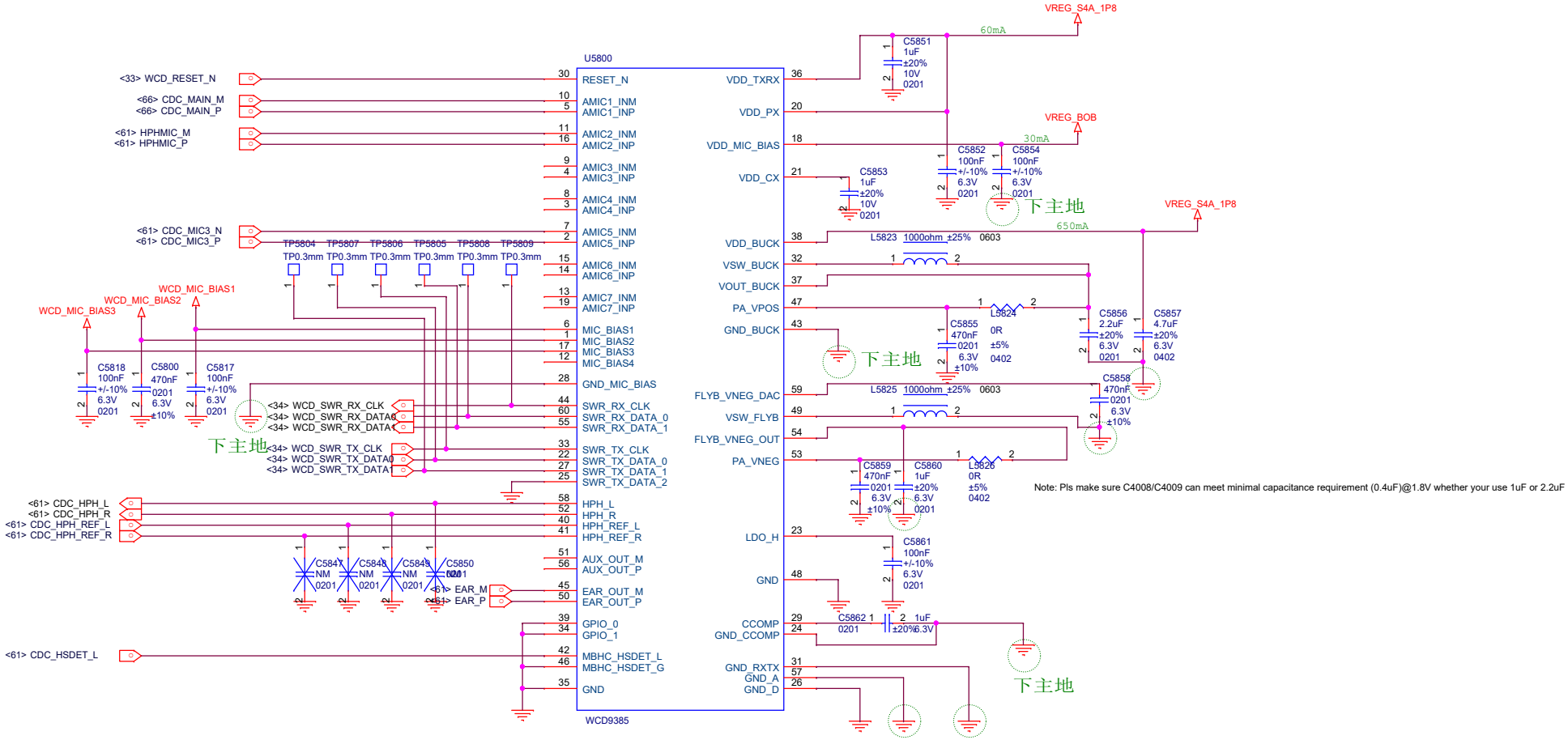

NOTE 1: ROUTE AN ISOLATED GROUND TRACE FROM CCOMP_REF TO THE CAP GROUND, THEN VIA TO THE MAIN GROUND PLANE
NOTE 2: PLACE VDD_BUCK CAP AS CLOSE TO CHIP EDGE AS POSSIBLE AND MINIMIZE LOOP INDUCTANCE
NOTE 3: USE SHORT AND WIDE TRACES FOR BUCK AND FLYBACK RELATED NETS
NOTE 4: ANALOG MIC INPUTS SHOULD BE ISOLATED WITH GROUND FROM NOISY OR SWITCHING SIGNALS AND SUPPLIES

Title	J11 MAIN
Size A3	Document Number WCD9340-1
Date: Monday, December 23, 2019	Sheet

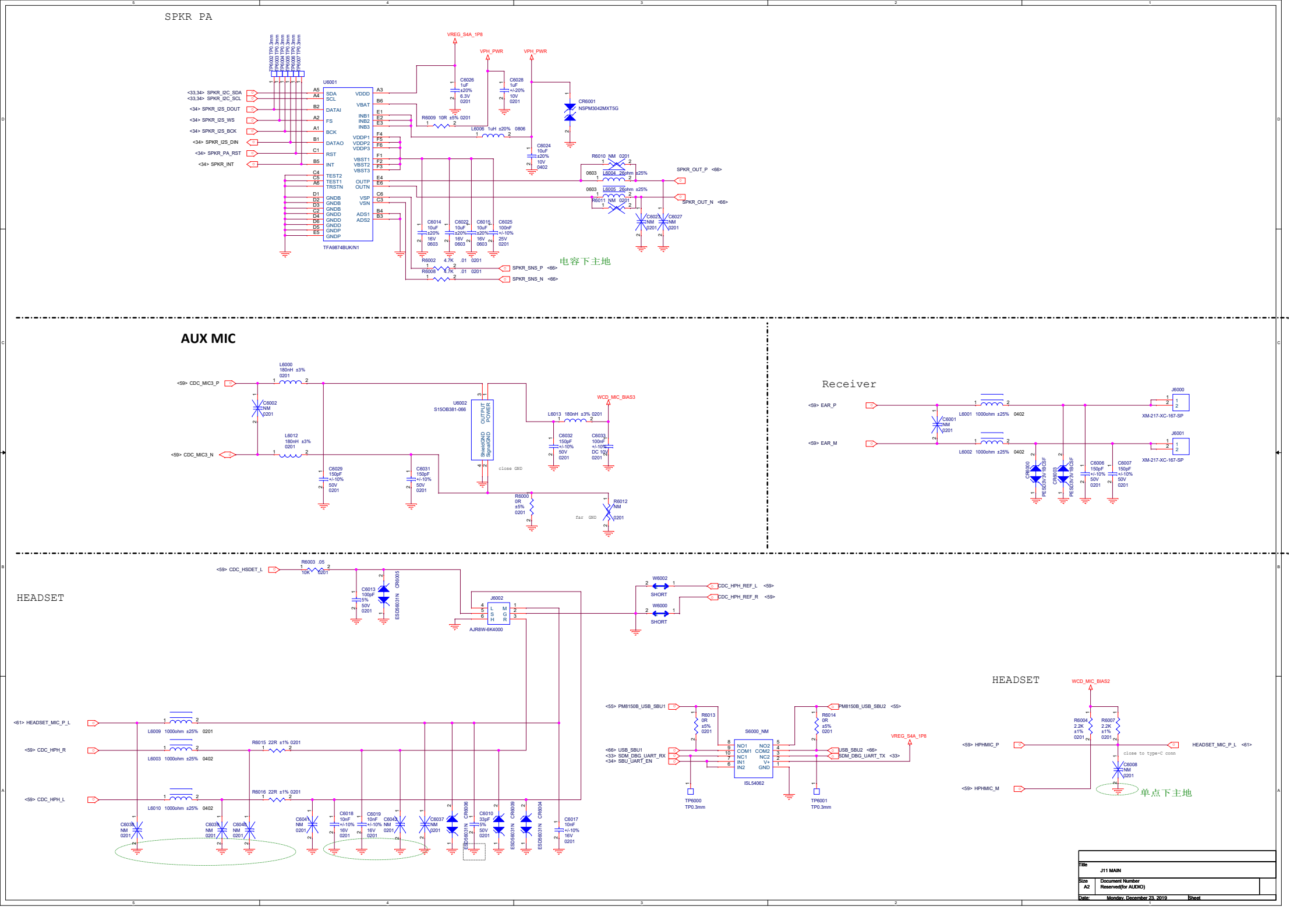
SPKR PA
AUX MIC
Receiver
HEADSET
HEADSET
U6001
TFA9874BUK/N1
U6002
S15OB381-066
J6000
J6001
XM-217-XC-167-SP
J6002
AJR8W-6K4000
S6000_NM
ISL54062
电容下主地
单点下主地
close GND
far GND
close to type-C conn
Title
J11 MAIN
Size
A2
Document Number
Reserved(for AUDIO)
Date:
Monday, December 23, 2019
Sheet

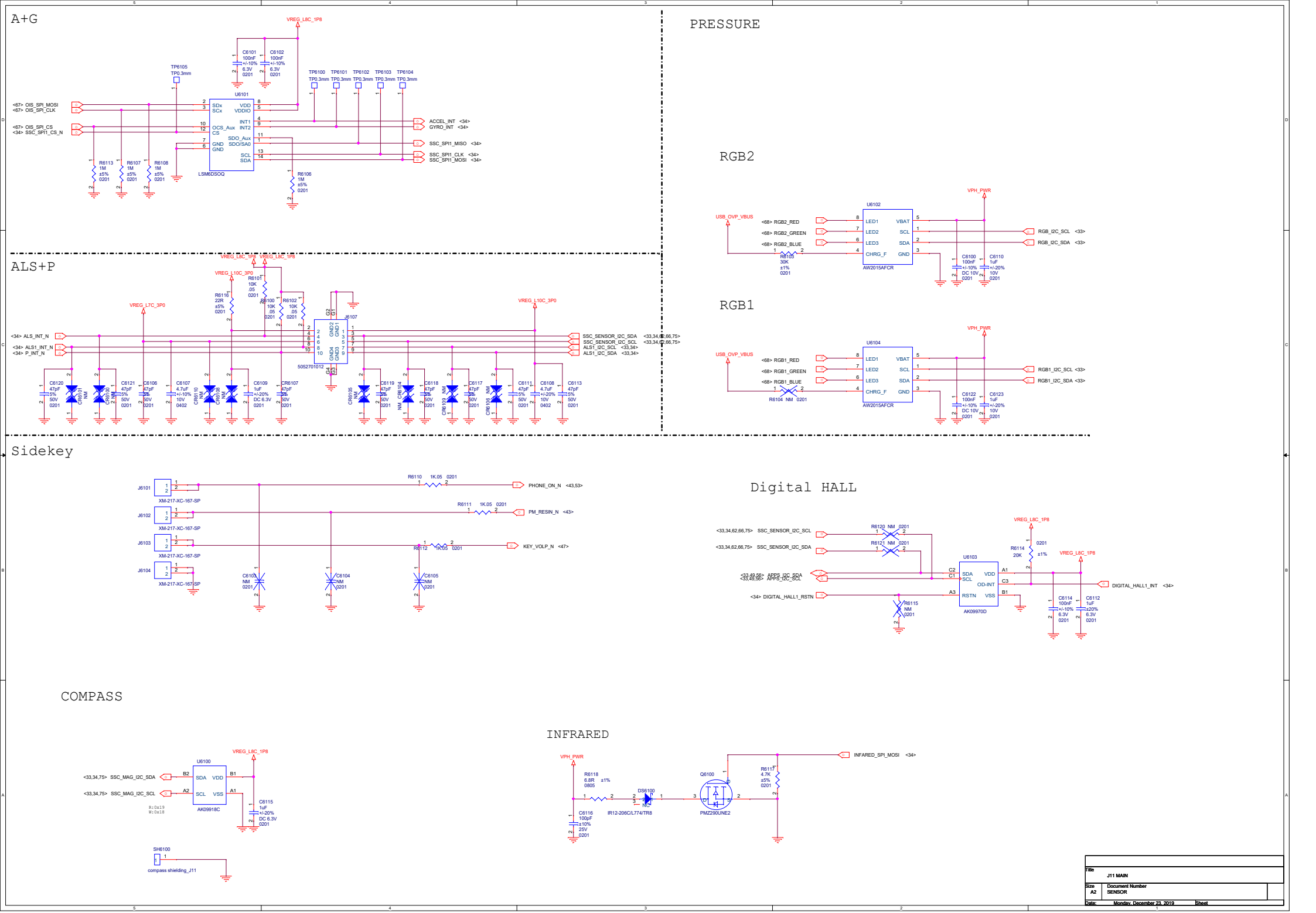
A+G
VREG_L8C_1P8
C6101 100nF +/-10% 6.3V 0201
C6102 100nF +/-10% 6.3V 0201
TP6105 TP0.3mm
TP6100 TP6101 TP6102 TP6103 TP6104 TP0.3mm
U6101
LSM6DSOQ
SDx SCx VDD VDDIO INT1 INT2 OCS_Aux CS SDO_Aux SDO/SA0 GND GND SCL SDA
<67> OIS_SPI_MOSI
<67> OIS_SPI_CLK
<67> OIS_SPI_CS
<34> SSC_SPI1_CS_N
ACCEL_INT <34>
GYRO_INT <34>
SSC_SPI1_MISO <34>
SSC_SPI1_CLK <34>
SSC_SPI1_MOSI <34>
R6113 1M ±5% 0201
R6107 1M ±5% 0201
R6108 1M ±5% 0201
R6106 1M ±5% 0201
PRESSURE
RGB2
U6102
AW2015AFCR
VPH_PWR
USB_OVP_VBUS
<68> RGB2_RED
<68> RGB2_GREEN
<68> RGB2_BLUE
LED1 LED2 LED3 CHRG_F VBAT SCL SDA GND
R6105 30K ±1% 0201
C6100 100nF +/-10% DC 10V 0201
C6110 1uF +/-20% 10V 0201
RGB_I2C_SCL <33>
RGB_I2C_SDA <33>
RGB1
U6104
AW2015AFCR
<68> RGB1_RED
<68> RGB1_GREEN
<68> RGB1_BLUE
R6104 NM 0201
C6122 100nF +/-10% DC 10V 0201
C6123 1uF +/-20% 10V 0201
RGB1_I2C_SCL <33>
RGB1_I2C_SDA <33>
ALS+P
VREG_L8C_1P8 VREG_L8C_1P8
VREG_L10C_3P0
VREG_L7C_3P0
VREG_L10C_3P0
R6116 22R ±5% 0201
R6101 10K .05 0201
R6100 10K .05 0201
R6102 10K .05 0201
J6107
5052701012
<34> ALS_INT_N
<34> ALS1_INT_N
<34> P_INT_N
SSC_SENSOR_I2C_SDA <33,34,62,66,75>
SSC_SENSOR_I2C_SCL <33,34,62,66,75>
ALS1_I2C_SCL <33,34>
ALS1_I2C_SDA <33,34>
C6120 47pF 5% 50V 0201
CR6101 NM
CR6100 NM
C6121 47pF 5% 50V 0201
C6106 47pF 5% 50V 0201
C6107 4.7uF +/-10% 10V 0402
CR6110 NM
CR6108 NM
C6109 1uF +/-20% DC 6.3V 0201
CR6107 47pF 5% 50V 0201
CR6105 NM
C6119 47pF 5% 50V 0201
CR6104 NM
C6118 47pF 5% 50V 0201
CR6103 NM
C6117 47pF 5% 50V 0201
CR6106 NM
C6111 47pF 5% 50V 0201
C6108 4.7uF +/-20% 10V 0402
C6113 47pF 5% 50V 0201
Sidekey
J6101 J6102 J6103 J6104
XM-217-XC-167-SP
R6110 1K.05 0201
R6111 1K.05 0201
R6112 1K.05 0201
PHONE_ON_N <43,53>
PM_RESIN_N <43>
KEY_VOLP_N <47>
C6103 NM 0201
C6104 NM 0201
C6105 NM 0201
Digital HALL
VREG_L8C_1P8
<33,34,62,66,75> SSC_SENSOR_I2C_SCL
<33,34,62,66,75> SSC_SENSOR_I2C_SDA
R6120 NM 0201
R6121 NM 0201
<33,49,56> APPS_I2C_SDA
<33,49,56> APPS_I2C_SCL
<34> DIGITAL_HALL1_RSTN
R6115 NM 0201
U6103
AK09970D
SDA SCL OD-INT RSTN VDD VSS
R6114 20K ±1% 0201
DIGITAL_HALL1_INT <34>
C6114 100nF +/-10% 6.3V 0201
C6112 1uF ±20% 6.3V 0201
COMPASS
VREG_L8C_1P8
U6100
AK09918C
<33,34,75> SSC_MAG_I2C_SDA
<33,34,75> SSC_MAG_I2C_SCL
R:0x19
W:0x18
C6115 1uF +/-20% DC 6.3V 0201
SH6100
compass shielding_J11
INFRARED
VPH_PWR
R6118 6.8R ±1% 0805
DS6100
IR12-206C/L774/TR8
Q6100
PMZ290UNE2
R6117 4.7K ±5% 0201
C6116 100pF ±10% 25V 0201
INFRARED_SPI_MOSI <34>
Title
J11 MAIN
Size
A2
Document Number
SENSOR
Date:
Monday, December 23, 2019
Sheet

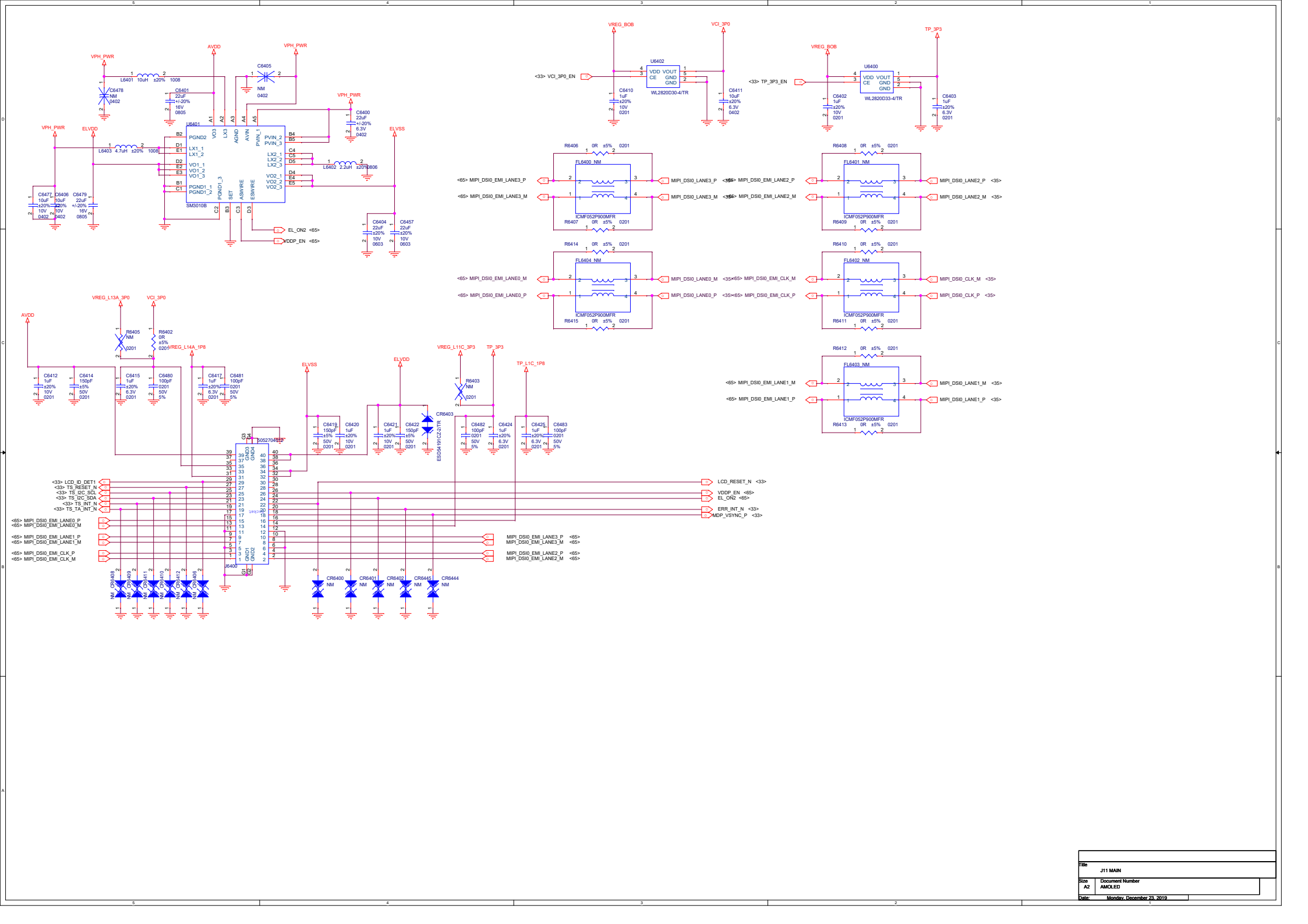

Title	J11 MAIN
Size A2	Document Number AMOLED
Date:	Monday, December 23, 2019

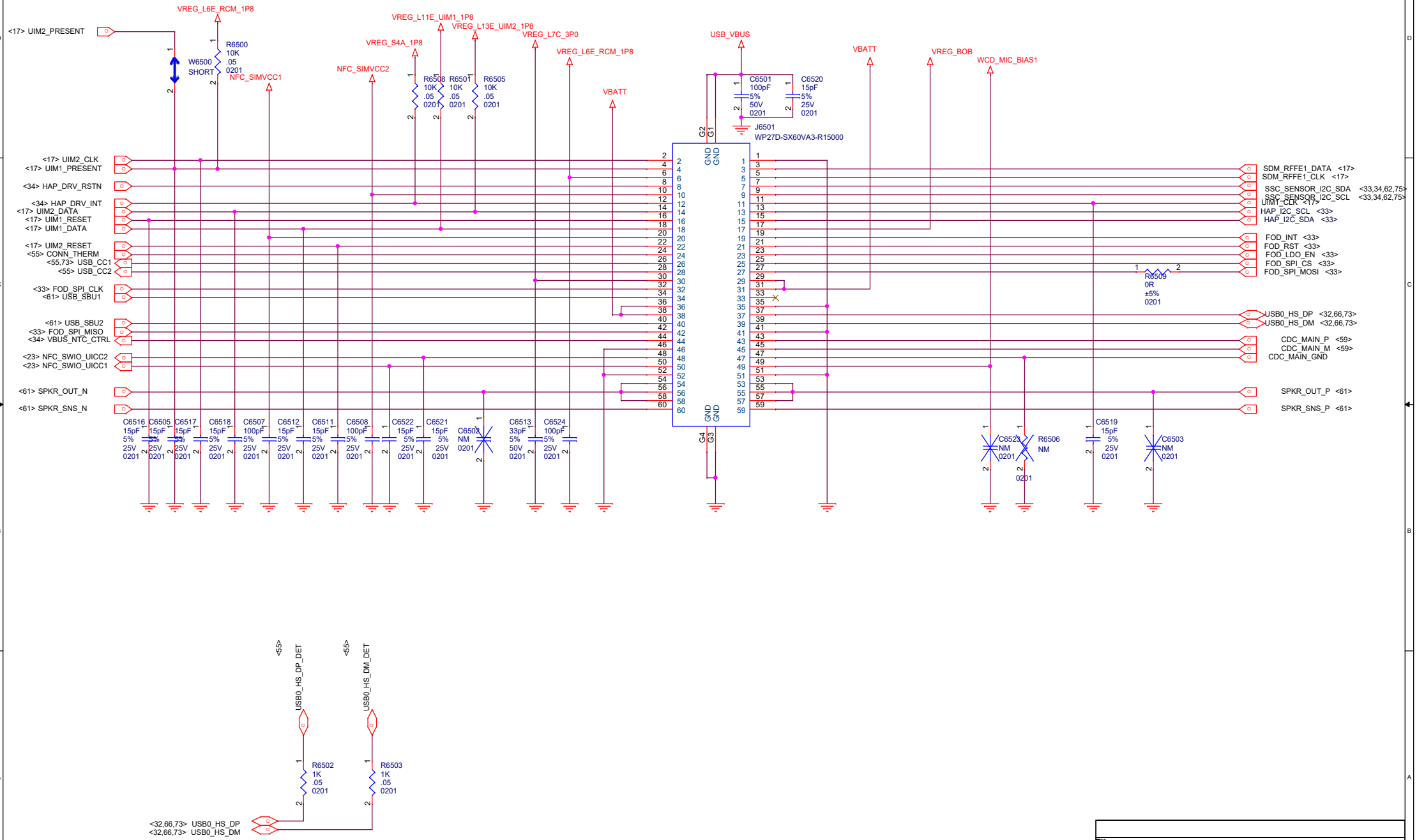

Title	J11 MAIN
Size A3	Document Number BTB
Date: Monday, December 23, 2019	Sheet 66 74

WIDE 64M

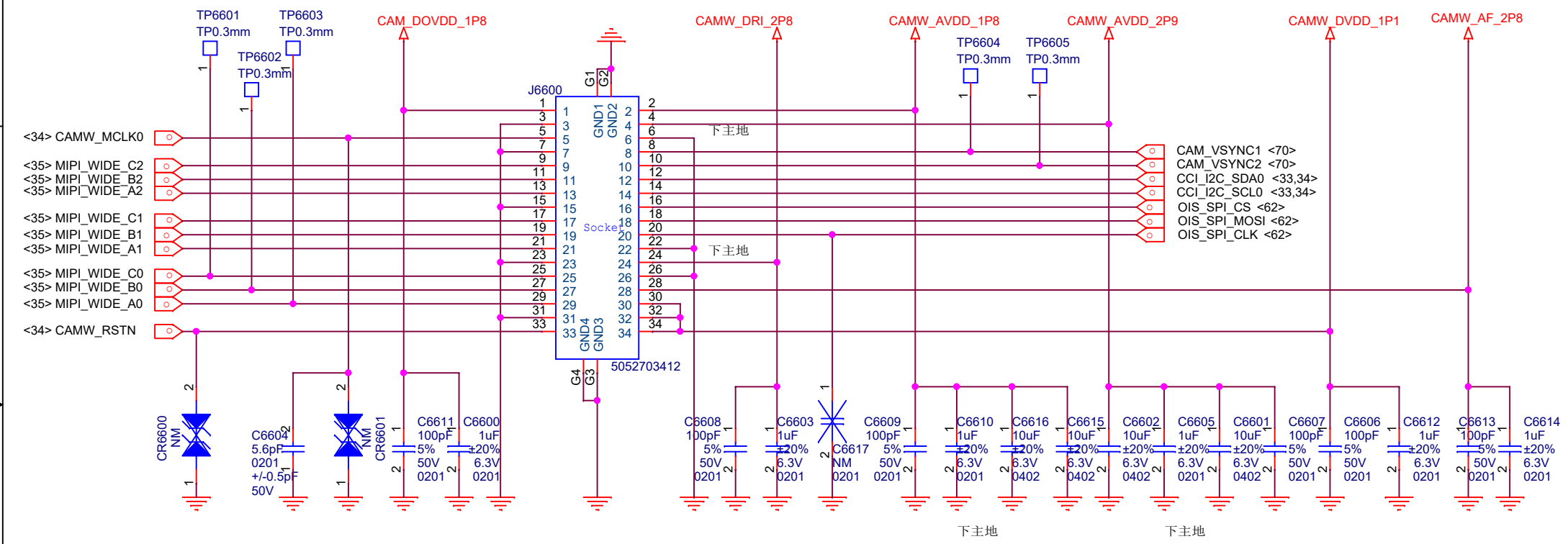

Title	J11 MAIN
Size A4	Document Number WIDE&TELE CAMERA
Date: Monday, December 23, 2019	Sheet 67 74

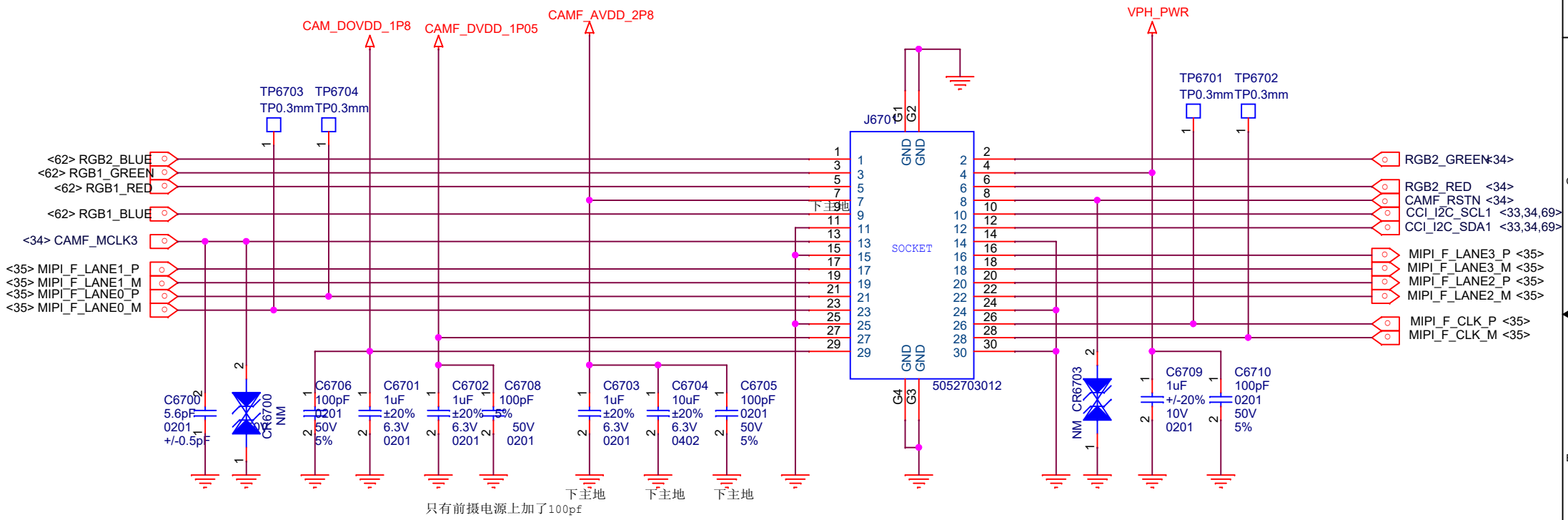

Title	J11 MAIN
Size A4	Document Number Reserved(for Analog FM)
Date: Monday, December 23, 2019	Sheet 68 of 74

ULTRA 13M CAMERA

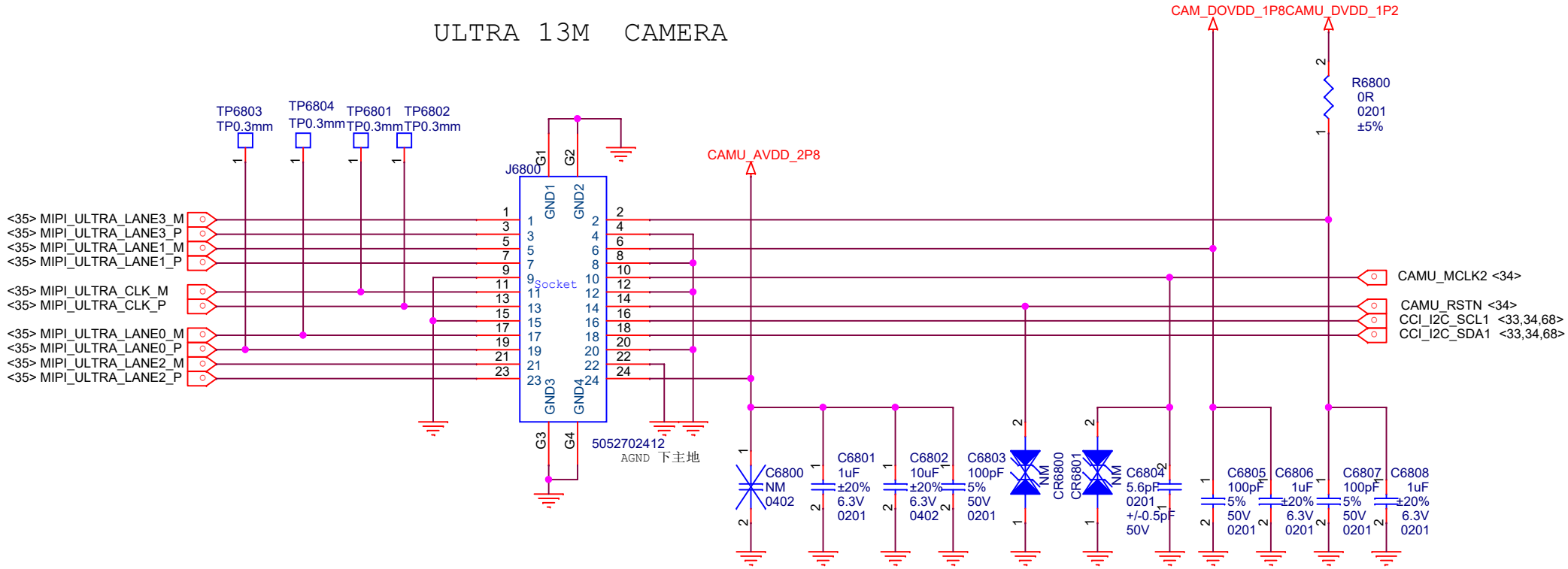

Title	J11 MAIN	
Size A4	Document Number ULTRA CAMERA	
Date: Monday, December 23, 2019	Sheet 69 of 74	

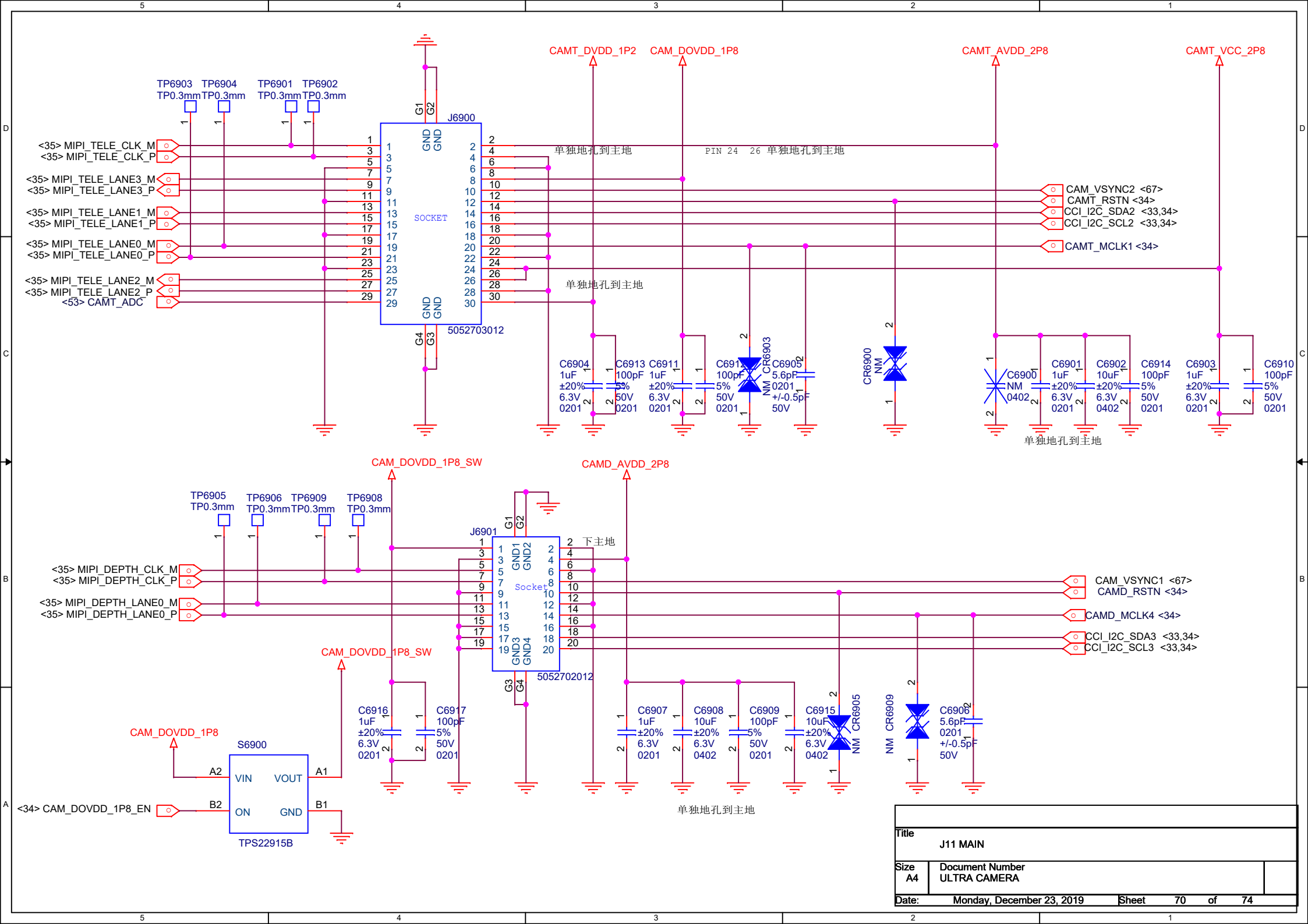
CAMT_DVDD_1P2
CAM_DOVDD_1P8
CAMT_AVDD_2P8
CAMT_VCC_2P8
TP6903 TP0.3mm
TP6904 TP0.3mm
TP6901 TP0.3mm
TP6902 TP0.3mm
J6900
SOCKET
5052703012
<35> MIPI_TELE_CLK_M
<35> MIPI_TELE_CLK_P
<35> MIPI_TELE_LANE3_M
<35> MIPI_TELE_LANE3_P
<35> MIPI_TELE_LANE1_M
<35> MIPI_TELE_LANE1_P
<35> MIPI_TELE_LANE0_M
<35> MIPI_TELE_LANE0_P
<35> MIPI_TELE_LANE2_M
<35> MIPI_TELE_LANE2_P
<53> CAMT_ADC
单独地孔到主地
PIN 24 26 单独地孔到主地
CAM_VSYNC2 <67>
CAMT_RSTN <34>
CCI_I2C_SDA2 <33,34>
CCI_I2C_SCL2 <33,34>
CAMT_MCLK1 <34>
C6904 1uF ±20% 6.3V 0201
C6913 100pF 5% 50V 0201
C6911 1uF ±20% 6.3V 0201
C6912 100pF 5% 50V 0201
CR6903 NM
C6905 5.6pF 0201 +/-0.5pF 50V
CR6900 NM
C6900 NM 0402
C6901 1uF ±20% 6.3V 0201
C6902 10uF ±20% 6.3V 0402
C6914 100pF 5% 50V 0201
C6903 1uF ±20% 6.3V 0201
C6910 100pF 5% 50V 0201
CAM_DOVDD_1P8_SW
CAMD_AVDD_2P8
TP6905 TP0.3mm
TP6906 TP0.3mm
TP6909 TP0.3mm
TP6908 TP0.3mm
J6901
Socket
5052702012
下主地
<35> MIPI_DEPTH_CLK_M
<35> MIPI_DEPTH_CLK_P
<35> MIPI_DEPTH_LANE0_M
<35> MIPI_DEPTH_LANE0_P
CAM_VSYNC1 <67>
CAMD_RSTN <34>
CAMD_MCLK4 <34>
CCI_I2C_SDA3 <33,34>
CCI_I2C_SCL3 <33,34>
CAM_DOVDD_1P8_SW
C6916 1uF ±20% 6.3V 0201
C6917 100pF 5% 50V 0201
C6907 1uF ±20% 6.3V 0201
C6908 10uF ±20% 6.3V 0402
C6909 100pF 5% 50V 0201
C6915 10uF ±20% 6.3V 0402
CR6905 NM
CR6909 NM
C6906 5.6pF 0201 +/-0.5pF 50V
CAM_DOVDD_1P8
S6900
VIN VOUT ON GND
A2 A1 B2 B1
TPS22915B
<34> CAM_DOVDD_1P8_EN
单独地孔到主地
Title
J11 MAIN
Size A4
Document Number
ULTRA CAMERA
Date: Monday, December 23, 2019
Sheet 70 of 74

WIDE

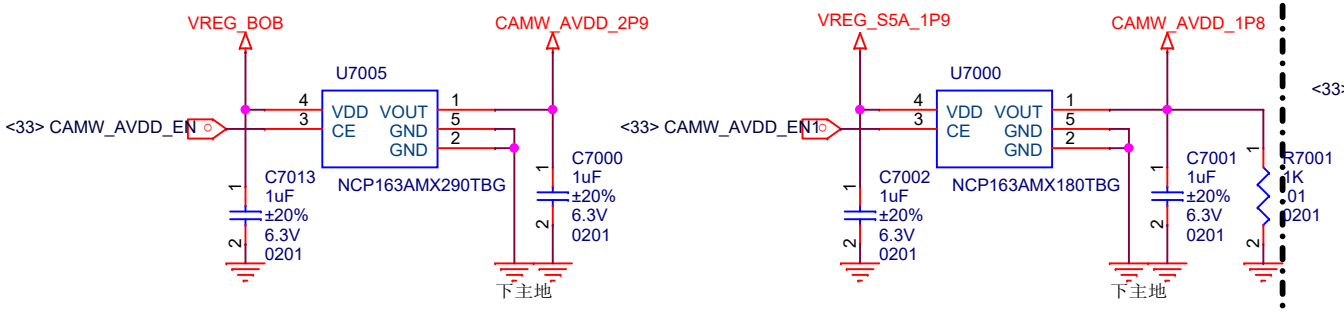

FRONT

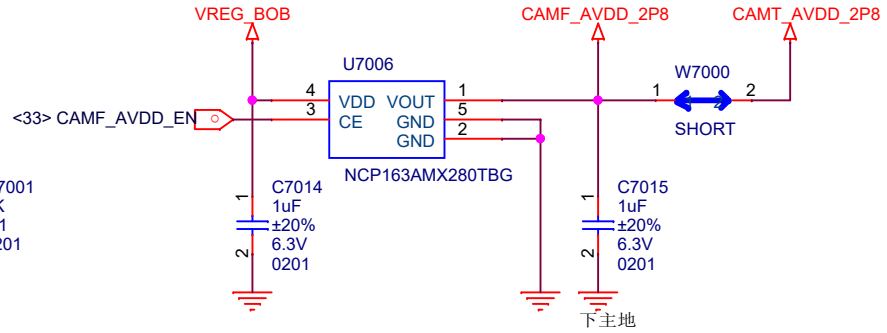

ULTRA

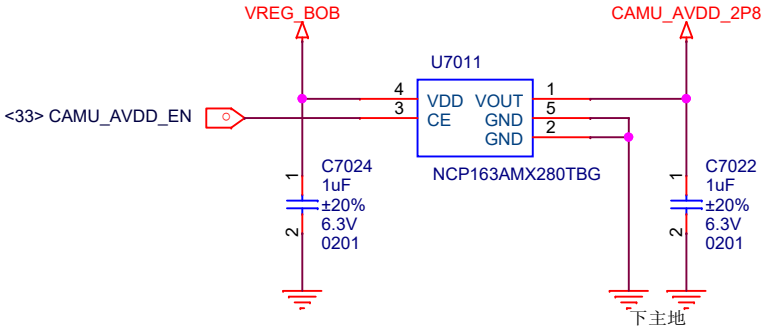

DEPTH

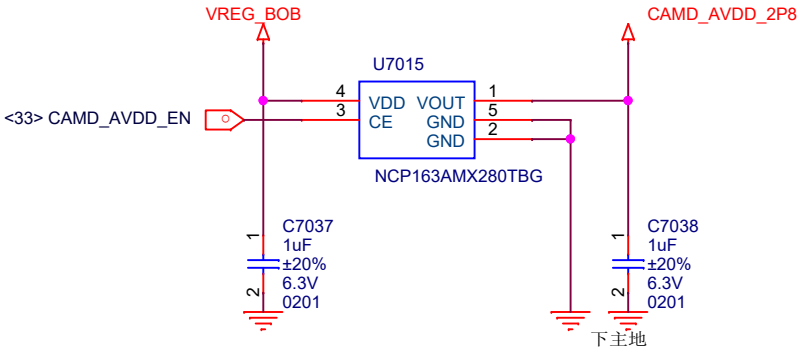

Title	J11 MAIN	
Size A4	Document Number CAMERA LDOs	P0
Date: Monday, December 23, 2019	Sheet 71 of 74	

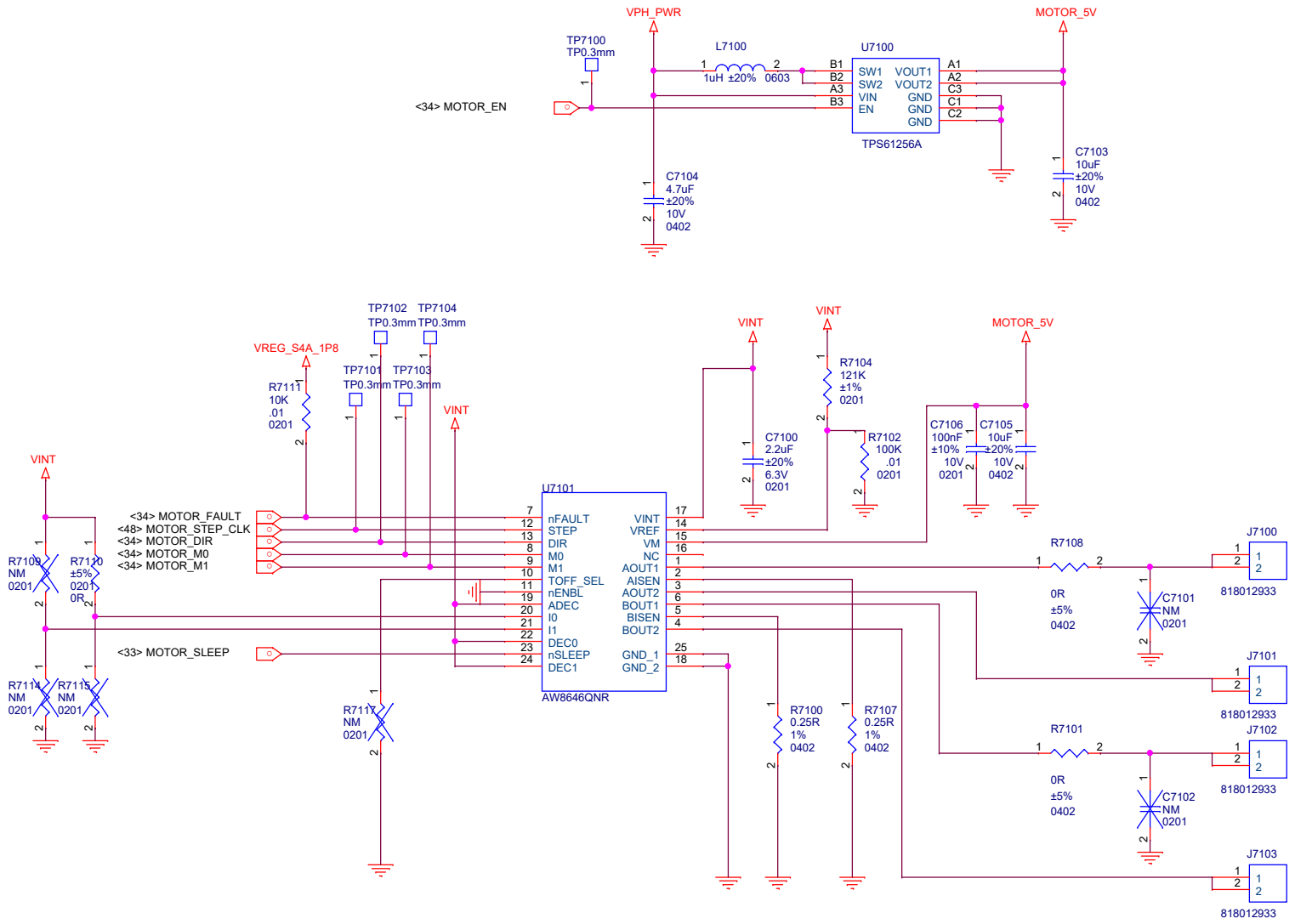

Title	J11 MAIN
Size B	Document Number SIM
Date: Monday, December 23, 2019	Sheet 72 of 74

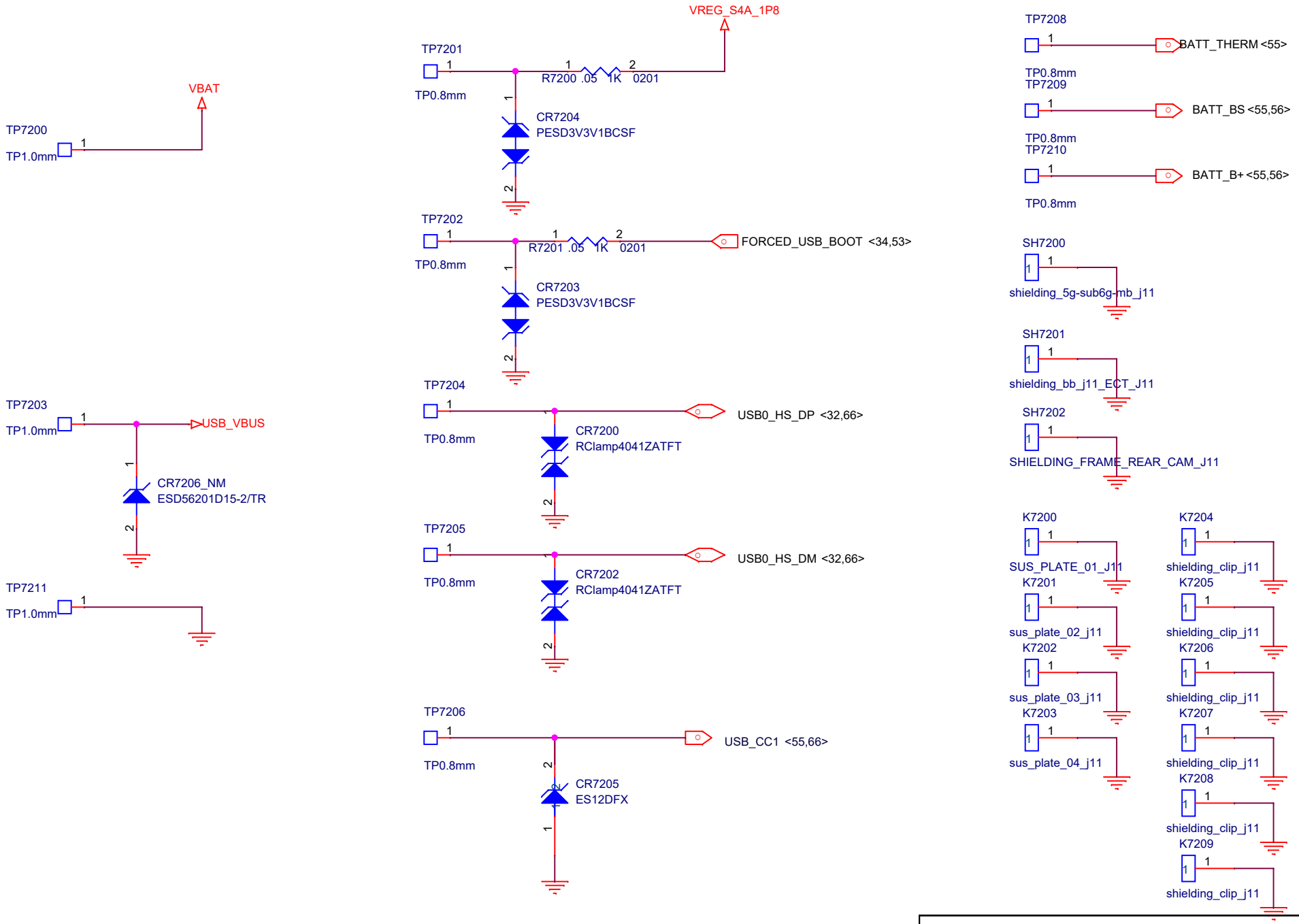

Title	J11 MAIN
Size A4	Document Number IR LED
Date: Monday, December 23, 2019	Sheet 73 of 74

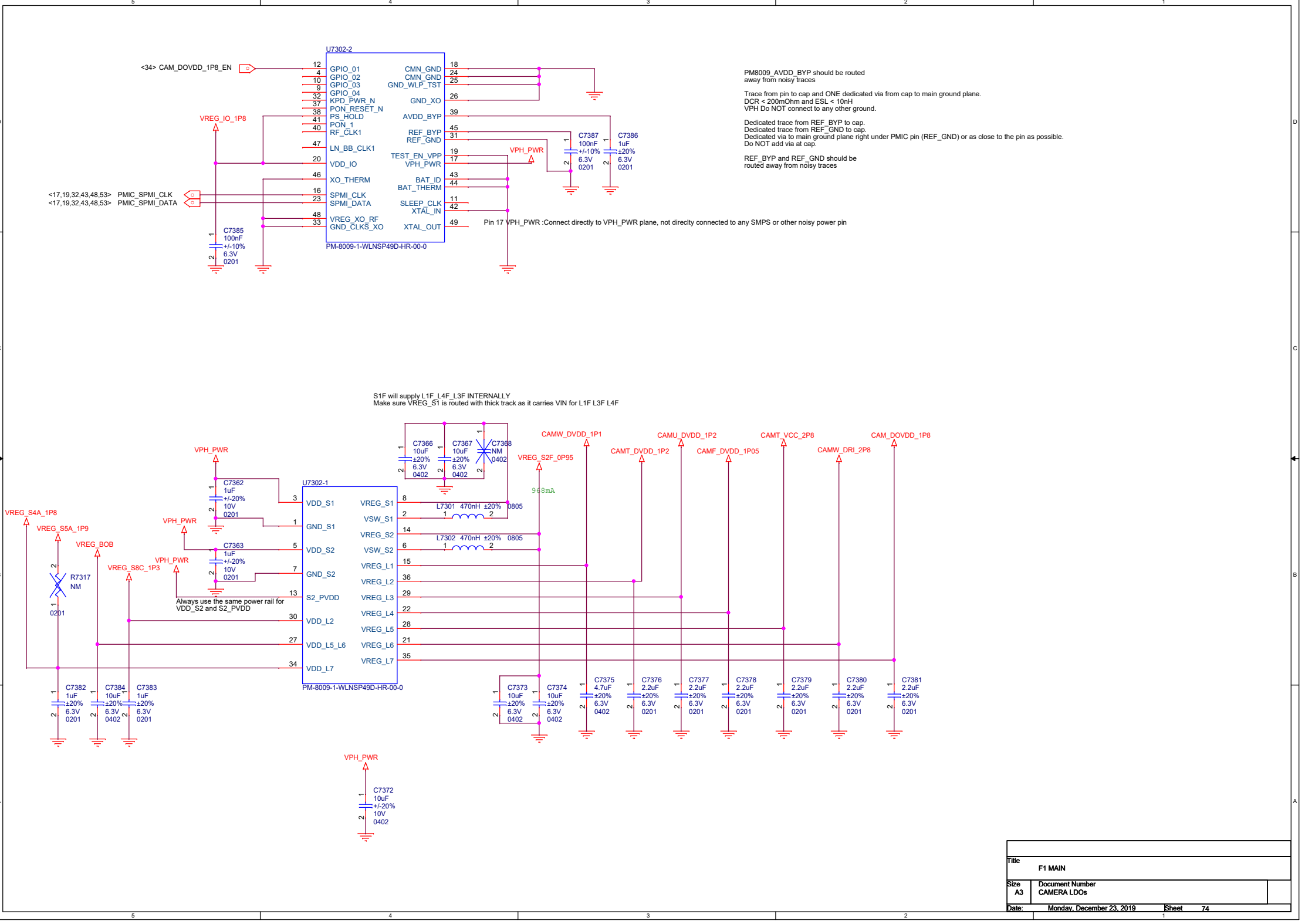
U7302-2
<34> CAM_DOVDD_1P8_EN
GPIO_01
GPIO_02
GPIO_03
GPIO_04
KPD_PWR_N
PON_RESET_N
PS_HOLD
PON_1
RF_CLK1
LN_BB_CLK1
VDD_IO
XO_THERM
SPMI_CLK
SPMI_DATA
VREG_XO_RF
GND_CLKS_XO
CMN_GND
CMN_GND
GND_WLP_TST
GND_XO
AVDD_BYP
REF_BYP
REF_GND
TEST_EN_VPP
VPH_PWR
BAT_ID
BAT_THERM
SLEEP_CLK
XTAL_IN
XTAL_OUT
VREG_IO_1P8
VPH_PWR
<17,19,32,43,48,53> PMIC_SPMI_CLK
<17,19,32,43,48,53> PMIC_SPMI_DATA
C7385 100nF +/-10% 6.3V 0201
C7387 100nF +/-10% 6.3V 0201
C7386 1uF ±20% 6.3V 0201
PM8009_AVDD_BYP should be routed away from noisy traces
Trace from pin to cap and ONE dedicated via from cap to main ground plane.
DCR < 200mOhm and ESL < 10nH
VPH Do NOT connect to any other ground.
Dedicated trace from REF_BYP to cap.
Dedicated trace from REF_GND to cap.
Dedicated via to main ground plane right under PMIC pin (REF_GND) or as close to the pin as possible.
Do NOT add via at cap.
REF_BYP and REF_GND should be routed away from noisy traces
Pin 17 VPH_PWR :Connect directly to VPH_PWR plane, not direclty connected to any SMPS or other noisy power pin
PM-8009-1-WLNSP49D-HR-00-0
S1F will supply L1F_L4F_L3F INTERNALLY
Make sure VREG_S1 is routed with thick track as it carries VIN for L1F L3F L4F
U7302-1
VDD_S1
GND_S1
VDD_S2
GND_S2
S2_PVDD
VDD_L2
VDD_L5_L6
VDD_L7
VREG_S1
VSW_S1
VREG_S2
VSW_S2
VREG_L1
VREG_L2
VREG_L3
VREG_L4
VREG_L5
VREG_L6
VREG_L7
VPH_PWR
VREG_S4A_1P8
VREG_S5A_1P9
VREG_BOB
VREG_S8C_1P3
R7317 NM 0201
C7362 1uF +/-20% 10V 0201
C7363 1uF +/-20% 10V 0201
Always use the same power rail for VDD_S2 and S2_PVDD
C7366 10uF ±20% 6.3V 0402
C7367 10uF ±20% 6.3V 0402
C7368 NM 0402
L7301 470nH ±20% 0805
L7302 470nH ±20% 0805
VREG_S2F_0P95
968mA
CAMW_DVDD_1P1
CAMT_DVDD_1P2
CAMU_DVDD_1P2
CAMF_DVDD_1P05
CAMT_VCC_2P8
CAMW_DRI_2P8
CAM_DOVDD_1P8
C7382 1uF ±20% 6.3V 0201
C7384 10uF ±20% 6.3V 0402
C7383 1uF ±20% 6.3V 0201
C7373 10uF ±20% 6.3V 0402
C7374 10uF ±20% 6.3V 0402
C7375 4.7uF ±20% 6.3V 0402
C7376 2.2uF ±20% 6.3V 0201
C7377 2.2uF ±20% 6.3V 0201
C7378 2.2uF ±20% 6.3V 0201
C7379 2.2uF ±20% 6.3V 0201
C7380 2.2uF ±20% 6.3V 0201
C7381 2.2uF ±20% 6.3V 0201
C7372 10uF +/-20% 10V 0402
Title
F1 MAIN
Size A3
Document Number
CAMERA LDOs
Date: Monday, December 23, 2019
Sheet 74

WIFI

TP7400 PAD_CR0.45 — PCIED_REFCLK_P_WLAN <37>
TP7401 PAD_CR0.45 — PCIED_REFCLK_M_WLAN <37>
TP7402 PAD_CR0.45 — PCIED_TX0_P_WLAN <37>
TP7403 PAD_CR0.45 — PCIED_TX0_M_WLAN <37>
TP7404 PAD_CR0.45 — PCIED_RX0_P_WLAN <37>
TP7405 PAD_CR0.45 — PCIED_RX0_M_WLAN <37>
TP7406 PAD_CR0.45 — PCIED_CLK_REQ_N <34>
TP7407 PAD_CR0.45 — PCIED_RST_N <34>
TP7408 PAD_CR0.45 — PCIED_WAKE_N <34>

TP7419 PAD_CR0.45 — HST_SW_CTRL <34>
TP7420 PAD_CR0.45 — HST_WLAN_UART_TX <34>
TP7421 PAD_CR0.45 — HST_WLAN_UART_RX <34>
TP7422 PAD_CR0.45 — HST_SLIM_DATA <34>
TP7423 PAD_CR0.45 — HST_SLIM_CLK <34>
TP7424 PAD_CR0.45 — WLAN_COEX_MDMUART_TX <17>
TP7425 PAD_CR0.45 — WLAN_COEX_MDMUART_RX <17>
TP7426 PAD_CR0.45 — HST_BT_UART_TX <33>
TP7427 PAD_CR0.45 — HST_BT_UART_RX <33>
TP7428 PAD_CR0.45 — HST_BT_UART_RFR <33>
TP7429 PAD_CR0.45 — HST_BT_UART_CTS <33>
TP7430 PAD_CR0.45 — HST_BLE_SNS_UART8_TX <34>
TP7431 PAD_CR0.45 — HST_BLE_SNS_UART8_RX <34>

TP7416 PAD_CR0.45 — GPS_LS <31>
TP7417 PAD_CR0.45 — WLAN_ANT0 <3>
TP7418 PAD_CR0.45 — WLAN_ANT1 <4>

TP7899 PAD_CR0.45 — PMK8002_RF_CLK3 <19>
TP7700 PAD_CR0.45 — MDM_RFFE3 <17>
TP7701 PAD_CR0.45 — MDM_RFFE4 <17>
TP7702 PAD_CR0.45 — MDM_SSBI1 <19,32,43>
TP7703 PAD_CR0.45 — HST_BT_EN <33>
TP7704 PAD_CR0.45 — HST_WLAN_EN <33>
TP7705 PAD_CR0.45 — RF_CONN_RFFE2 <17>

RF

TP7432 PAD_CR0.45 — QLINK_CLK_M <17>
TP7433 PAD_CR0.45 — QLINK_CLK_P <17>
TP7434 PAD_CR0.45 — QLINK_UL0_M <17>
TP7435 PAD_CR0.45 — QLINK_UL0_P <17>
TP7436 PAD_CR0.45 — QLINK_UL3_M <17>
TP7437 PAD_CR0.45 — QLINK_UL3_P <17>
TP7438 PAD_CR0.45 — QLINK_DL0_M <17>
TP7439 PAD_CR0.45 — QLINK_DL0_P <17>
TP7440 PAD_CR0.45 — QLINK_DL3_M <17>
TP7441 PAD_CR0.45 — QLINK_DL3_P <17>
TP7442 PAD_CR0.45 — QLINK_DL4_M <17>
TP7443 PAD_CR0.45 — QLINK_DL4_P <17>
TP7444 PAD_CR0.45 — QLINK_DL5_M <17>
TP7445 PAD_CR0.45 — QLINK_DL5_P <17>
TP7446 PAD_CR0.45 — QLINK_UDL1_M <17>
TP7447 PAD_CR0.45 — QLINK_UDL1_P <17>
TP7448 PAD_CR0.45 — QLINK_UDL2_M <17>
TP7449 PAD_CR0.45 — QLINK_UDL2_P <17>
TP7450 PAD_CR0.45 — QLINK0_WMSS_RESET_N <17>
TP7451 PAD_CR0.45 — SDR_QLINK_EN <17>
TP7452 PAD_CR0.45 — SDR_QLINK_REQ <17>

TP7453 PAD_CR0.45 — SDR_RFFE1_CLK <8>
TP7455 PAD_CR0.45 — SDR_RFFE1_DATA <8>
TP7457 PAD_CR0.45 — SDR_RFFE2_CLK <20>
TP7458 PAD_CR0.45 — SDR_RFFE2_DATA <20>
TP7459 PAD_CR0.45 — SDR_RFFE5_CLK <5,12,21>
TP7460 PAD_CR0.45 — SDR_RFFE5_DATA <5,12,21>
TP7461 PAD_CR0.45 — SDR_RFFE7_CLK <11,20,21>
TP7462 PAD_CR0.45 — SDR_RFFE7_DATA <11,20,21>
TP7713 PAD_CR0.45 — SDR_RFFE0_CLK <17>
TP7714 PAD_CR0.45 — SDR_RFFE0_DATA <17>
TP7485 PAD_CR0.45 — SDR_RFFE9_CLK <7>
TP7484 PAD_CR0.45 — SDR_RFFE9_DATA <7>
TP7512 PAD_CR0.45 — PMK8002_RF_CLK1 <19>
TP7466 PAD_CR0.45 — HST_WL_TX_EN <20,21>
TP7471 PAD_CR0.45 — RTDAC2_OUT1_M <20>
TP7470 PAD_CR0.45 — RTDAC2_OUT1_P <20>
TP7473 PAD_CR0.45 — SDR_GRFC5 <4>
TP7474 PAD_CR0.45 — SDR_GRFC4 <4>
TP7475 PAD_CR0.45 — SDR_GRFC14 <4>
TP7477 PAD_CR0.45 — SDR_GRFC18 <4>
TP8696 PAD_CR0.45 — SDR_GRFC19 <4>
TP8692 PAD_CR0.45 — SDR_GRFC3 <8>
TP8695 PAD_CR0.45 — N78_SRS_1T4R <4>
TP8695 PAD_CR0.45 — N41_SRS_1T4R <4>

TP7728 PAD_CR0.45 — N41_TRX_ANT1 <4>
TP7704 PAD_CR0.45 — ANT3_N41_N78_N79 <4>
TP7483 PAD_CR0.45 — ANT7-N78-N79_RFCARD <4>
TP7481 PAD_CR0.45 — RF_N41_TX_CR1 <8>
TP7479 PAD_CR0.45 — FBRX_QPM5585_1_QPM5677_1 <20>
TP7482 PAD_CR0.45 — QLN_DRX_B41_MIMO <12>
TP7712 PAD_CR0.45 — QLN_PRX_B41_MIMO <11>
TP7486 PAD_CR0.45 — FBRX_LBOUT_SP3T <7>
TP7487 PAD_CR0.45 — FBRX_QPM5675_1_SP3T <20>
TP7488 PAD_CR0.45 — SDR_TX0_HB <8>
TP7489 PAD_CR0.45 — SDR_TX0_LB1 <8>
TP7490 PAD_CR0.45 — SDR_TX0_LB2 <8>
TP7490 PAD_CR0.45 — SDR_TX0_LB1 <8>
TP7492 PAD_CR0.45 — SDR_TX0_MB2 <7>
TP7493 PAD_CR0.45 — SDR_TX2_5G <20>
TP7498 PAD_CR0.45 — SDR_TX2_5GLM <20>
TP7497 PAD_CR0.45 — SDR_PRX10 <11>
TP7500 PAD_CR0.45 — SDR_PRX8 <11>
TP7501 PAD_CR0.45 — SDR_PRX9 <11>
TP7480 PAD_CR0.45 — SDR_PRX0 <11>
TP7503 PAD_CR0.45 — SDR_PRX1 <11>
TP7505 PAD_CR0.45 — SDR_DRX13 <21>
TP7502 PAD_CR0.45 — SDR_PRX13_1 <20>
TP7716 PAD_CR0.45 — SDR_PRX17 <20>
TP7504 PAD_CR0.45 — SDR_DRX0 <12>
TP7506 PAD_CR0.45 — SDR_DRX7 <12>
TP7507 PAD_CR0.45 — SDR_DRX6 <12>
TP7508 PAD_CR0.45 — SDR_DRX0 <12>
TP7509 PAD_CR0.45 — SDR_DRX1 <12>
TP7511 PAD_CR0.45 — SDR_DRX3 <12>
TP7718 PAD_CR0.45 — SDR_DRX15 <21>
TP8125 PAD_CR0.45 — RF_N79_PRX_MIMO <20>
TP7717 PAD_CR0.45 — SDR_PRX3 <11>

jidai

TP7678 PAD_CR0.45 — ALS2_INT <34>
TP7719 PAD_CR0.45 — ALS2_I2C_SCL <34>
TP7720 PAD_CR0.45 — ALS2_I2C_SCL <34>
TP7721 PAD_CR0.45 — SSC_SENSOR_I2C_SDA <33,34,62,66>
TP7722 PAD_CR0.45 — SSC_SENSOR_I2C_SCL <33,34,62,66>
TP7723 PAD_CR0.45
TP7726 PAD_CR0.45
TP7732 PAD_CR0.45 — SSC_MAG_I2C_SCL <33,34,62>
TP7733 PAD_CR0.45 — SSC_MAG_I2C_SDA <33,34,62>
TP7727 PAD_CR0.45 — WIFI_SKIN_THERM <19>
TP7730 PAD_CR0.45
TP7730 PAD_CR0.45 — FLASH_LED1 <51>
TP8299 PAD_CR0.45
TP7710 PAD_CR0.45 — FLASH_LED2 <51>
TP8298 PAD_CR0.45
TP8274 PAD_CR0.45
TP8232 PAD_CR0.45 — VREG_L7C_3P0

RF电源

TP7683 PAD_CR0.45 — VPH_PWR
TP7745 PAD_CR0.45
TP7746 PAD_CR0.45
TP7747 PAD_CR0.45
TP7748 PAD_CR0.45
TP7687 PAD_CR0.45 — DET6100_VDD1
TP8291 PAD_CR0.45
TP7688 PAD_CR0.45 — DET6100_VDD2
TP8292 PAD_CR0.45
TP7750 PAD_CR0.45 — VPH_PWR
TP7751 PAD_CR0.45
TP7752 PAD_CR0.45
TP7753 PAD_CR0.45
TP7689 PAD_CR0.45 — DET6100_VDD3
TP8293 PAD_CR0.45
TP7690 PAD_CR0.45 — DET6100_VDD4
TP8294 PAD_CR0.45
TP7684 PAD_CR0.45 — VPA_LB
TP7685 PAD_CR0.45
TP7686 PAD_CR0.45 — VPA
TP7723 PAD_CR0.45

WIFI电源

TP7409 PAD_CR0.45 — VREG_L5E_RCM_1P7
TP7410 PAD_CR0.45 — VREG_S5A_1P9
TP7412 PAD_CR0.45
TP7735 PAD_CR0.45 — VPH_PWR
TP7736 PAD_CR0.45
TP7743 PAD_CR0.45
TP7744 PAD_CR0.45
TP7738 PAD_CR0.45
TP7737 PAD_CR0.45
TP7413 PAD_CR0.45 — VREG_S2F_0P95
TP7892 PAD_CR0.45 — VREG_S6C_1P3
TP7415 PAD_CR0.45 — VREG_S5A_0P9
TP7736 PAD_CR0.45 — VREG_S4A_1P8
TP7856 PAD_CR0.45 — VREG_L15A_3P3

TP7756 PAD_CR0.45 — VPA_GSM
TP7757 PAD_CR0.45
TP7759 PAD_CR0.45
TP7845 PAD_CR0.45
TP7933 PAD_CR0.45
TP7832 PAD_CR0.45 — VREG_L4E_RCM_3P8
TP7893 PAD_CR0.45 — VREG_L4E_RCM_0P875
TP7894 PAD_CR0.45 — VREG_L5E_RCM_1P8
TP7895 PAD_CR0.45 — VREG_L3E_RCM_3P8
TP7896 PAD_CR0.45
TP7896 PAD_CR0.45 — VREG_L16E_RCM_1P8
TP7897 PAD_CR0.45 — VREG_L1E_RCM_1P2
TP7760 PAD_CR0.45 — PA_VBAT_LDO
TP7762 PAD_CR0.45 — VREG_L15E_1P2_RF
TP7729 PAD_CR0.45 — VREG_L15E_1P2
TP7731 PAD_CR0.45 — VREG_L8C_1P8
TP7742 PAD_CR0.45 — RF_LDO_XPXT

TP7758 PAD_CR0.45
TP7895 PAD_CR0.45
TP7887 PAD_CR0.45
TP7899 PAD_CR0.45
TP7901 PAD_CR0.45
TP7903 PAD_CR0.45
TP7905 PAD_CR0.45
TP7907 PAD_CR0.45
TP7909 PAD_CR0.45
TP7911 PAD_CR0.45
TP7913 PAD_CR0.45
TP7915 PAD_CR0.45
TP7917 PAD_CR0.45
TP7919 PAD_CR0.45
TP7921 PAD_CR0.45
TP7923 PAD_CR0.45
TP7925 PAD_CR0.45
TP7927 PAD_CR0.45
TP7929 PAD_CR0.45
TP7931 PAD_CR0.45
TP7933 PAD_CR0.45
TP7935 PAD_CR0.45
TP7937 PAD_CR0.45
TP7939 PAD_CR0.45
TP7941 PAD_CR0.45
TP7943 PAD_CR0.45
TP7945 PAD_CR0.45
TP7947 PAD_CR0.45
TP7949 PAD_CR0.45
TP7951 PAD_CR0.45
TP7953 PAD_CR0.45
TP7955 PAD_CR0.45
TP7957 PAD_CR0.45
TP7959 PAD_CR0.45

TP7896 PAD_CR0.45
TP7898 PAD_CR0.45
TP7900 PAD_CR0.45
TP7902 PAD_CR0.45
TP7904 PAD_CR0.45
TP7906 PAD_CR0.45
TP7908 PAD_CR0.45
TP7910 PAD_CR0.45
TP7912 PAD_CR0.45
TP7914 PAD_CR0.45
TP7916 PAD_CR0.45
TP7918 PAD_CR0.45
TP7920 PAD_CR0.45
TP7922 PAD_CR0.45
TP7924 PAD_CR0.45
TP7926 PAD_CR0.45
TP7928 PAD_CR0.45
TP7930 PAD_CR0.45
TP7932 PAD_CR0.45
TP7934 PAD_CR0.45
TP7936 PAD_CR0.45
TP7938 PAD_CR0.45
TP7940 PAD_CR0.45
TP7942 PAD_CR0.45
TP7944 PAD_CR0.45
TP7946 PAD_CR0.45
TP7948 PAD_CR0.45
TP7950 PAD_CR0.45
TP7952 PAD_CR0.45
TP7954 PAD_CR0.45
TP7956 PAD_CR0.45
TP7958 PAD_CR0.45
TP7960 PAD_CR0.45

TP8228 PAD_CR0.45
TP7961 PAD_CR0.45
TP7964 PAD_CR0.45
TP7967 PAD_CR0.45
TP7970 PAD_CR0.45
TP7973 PAD_CR0.45
TP7976 PAD_CR0.45
TP7979 PAD_CR0.45
TP7982 PAD_CR0.45
TP7985 PAD_CR0.45
TP7988 PAD_CR0.45
TP7991 PAD_CR0.45
TP7994 PAD_CR0.45
TP7997 PAD_CR0.45
TP8000 PAD_CR0.45
TP8003 PAD_CR0.45
TP8006 PAD_CR0.45
TP8009 PAD_CR0.45
TP8012 PAD_CR0.45
TP8015 PAD_CR0.45
TP8018 PAD_CR0.45
TP8021 PAD_CR0.45
TP8024 PAD_CR0.45
TP8027 PAD_CR0.45
TP8030 PAD_CR0.45
TP8033 PAD_CR0.45
TP8036 PAD_CR0.45
TP8039 PAD_CR0.45
TP8042 PAD_CR0.45
TP8045 PAD_CR0.45
TP8048 PAD_CR0.45
TP8051 PAD_CR0.45
TP8054 PAD_CR0.45
TP8057 PAD_CR0.45

TP7962 PAD_CR0.45
TP7965 PAD_CR0.45
TP7968 PAD_CR0.45
TP7971 PAD_CR0.45
TP7974 PAD_CR0.45
TP7977 PAD_CR0.45
TP7980 PAD_CR0.45
TP7983 PAD_CR0.45
TP7986 PAD_CR0.45
TP7989 PAD_CR0.45
TP7992 PAD_CR0.45
TP7995 PAD_CR0.45
TP7998 PAD_CR0.45
TP8001 PAD_CR0.45
TP8004 PAD_CR0.45
TP8007 PAD_CR0.45
TP8010 PAD_CR0.45
TP8013 PAD_CR0.45
TP8016 PAD_CR0.45
TP8019 PAD_CR0.45
TP8022 PAD_CR0.45
TP8025 PAD_CR0.45
TP8028 PAD_CR0.45
TP8031 PAD_CR0.45
TP8034 PAD_CR0.45
TP8037 PAD_CR0.45
TP8040 PAD_CR0.45
TP8043 PAD_CR0.45
TP8046 PAD_CR0.45
TP8049 PAD_CR0.45
TP8052 PAD_CR0.45
TP8055 PAD_CR0.45
TP8058 PAD_CR0.45

TP8063 PAD_CR0.45
TP8065 PAD_CR0.45
TP8067 PAD_CR0.45
TP8069 PAD_CR0.45
TP8071 PAD_CR0.45
TP8073 PAD_CR0.45
TP8075 PAD_CR0.45
TP8077 PAD_CR0.45
TP8079 PAD_CR0.45
TP8081 PAD_CR0.45
TP8083 PAD_CR0.45
TP8085 PAD_CR0.45
TP8087 PAD_CR0.45
TP8089 PAD_CR0.45
TP8091 PAD_CR0.45
TP8093 PAD_CR0.45
TP8095 PAD_CR0.45
TP8097 PAD_CR0.45
TP8099 PAD_CR0.45
TP8101 PAD_CR0.45
TP8103 PAD_CR0.45
TP8105 PAD_CR0.45
TP8107 PAD_CR0.45
TP8109 PAD_CR0.45
TP8111 PAD_CR0.45
TP8113 PAD_CR0.45
TP8115 PAD_CR0.45
TP8117 PAD_CR0.45
TP8119 PAD_CR0.45
TP8121 PAD_CR0.45
TP8123 PAD_CR0.45
TP8125 PAD_CR0.45
TP8127 PAD_CR0.45
TP8129 PAD_CR0.45
TP8131 PAD_CR0.45
TP8133 PAD_CR0.45
TP8135 PAD_CR0.45
TP8137 PAD_CR0.45
TP8139 PAD_CR0.45
TP8141 PAD_CR0.45
TP8143 PAD_CR0.45
TP8145 PAD_CR0.45
TP8147 PAD_CR0.45
TP8149 PAD_CR0.45
TP8151 PAD_CR0.45
TP8153 PAD_CR0.45
TP8155 PAD_CR0.45
TP8157 PAD_CR0.45

TP8225 PAD_CR0.45
TP8227 PAD_CR0.45
TP8229 PAD_CR0.45
TP8231 PAD_CR0.45
TP8233 PAD_CR0.45
TP8235 PAD_CR0.45
TP8237 PAD_CR0.45
TP8239 PAD_CR0.45
TP8241 PAD_CR0.45
TP8243 PAD_CR0.45
TP8245 PAD_CR0.45
TP8247 PAD_CR0.45
TP8249 PAD_CR0.45
TP8251 PAD_CR0.45
TP8253 PAD_CR0.45
TP8255 PAD_CR0.45
TP8257 PAD_CR0.45
TP8259 PAD_CR0.45
TP8261 PAD_CR0.45
TP8263 PAD_CR0.45
TP8265 PAD_CR0.45
TP8267 PAD_CR0.45
TP8269 PAD_CR0.45
TP8271 PAD_CR0.45
TP8273 PAD_CR0.45
TP8275 PAD_CR0.45
TP8277 PAD_CR0.45
TP8279 PAD_CR0.45
TP8281 PAD_CR0.45
TP8283 PAD_CR0.45
TP8285 PAD_CR0.45
TP8287 PAD_CR0.45
TP8289 PAD_CR0.45

TP8226 PAD_CR0.45
TP8230 PAD_CR0.45
TP8234 PAD_CR0.45
TP8236 PAD_CR0.45
TP8238 PAD_CR0.45
TP8240 PAD_CR0.45
TP8242 PAD_CR0.45
TP8244 PAD_CR0.45
TP8246 PAD_CR0.45
TP8248 PAD_CR0.45
TP8250 PAD_CR0.45
TP8252 PAD_CR0.45
TP8254 PAD_CR0.45
TP8256 PAD_CR0.45
TP8258 PAD_CR0.45
TP8260 PAD_CR0.45
TP8262 PAD_CR0.45
TP8264 PAD_CR0.45
TP8266 PAD_CR0.45
TP8268 PAD_CR0.45
TP8270 PAD_CR0.45
TP8272 PAD_CR0.45
TP8276 PAD_CR0.45
TP8278 PAD_CR0.45
TP8280 PAD_CR0.45
TP8282 PAD_CR0.45
TP8284 PAD_CR0.45
TP8286 PAD_CR0.45
TP8288 PAD_CR0.45
TP8290 PAD_CR0.45

TP7515 PAD_CR0.45
TP7513 PAD_CR0.45
TP7514 PAD_CR0.45
TP7518 PAD_CR0.45
TP7519 PAD_CR0.45
TP7517 PAD_CR0.45
TP7520 PAD_CR0.45
TP7521 PAD_CR0.45
TP7522 PAD_CR0.45
TP7523 PAD_CR0.45
TP7525 PAD_CR0.45
TP7524 PAD_CR0.45
TP7526 PAD_CR0.45
TP7530 PAD_CR0.45
TP7527 PAD_CR0.45
TP7528 PAD_CR0.45
TP7532 PAD_CR0.45
TP7529 PAD_CR0.45
TP7533 PAD_CR0.45
TP7531 PAD_CR0.45
TP7534 PAD_CR0.45
TP7536 PAD_CR0.45
TP7538 PAD_CR0.45
TP7537 PAD_CR0.45
TP7540 PAD_CR0.45
TP7539 PAD_CR0.45
TP7542 PAD_CR0.45
TP7541 PAD_CR0.45
TP7544 PAD_CR0.45
TP7543 PAD_CR0.45
TP7546 PAD_CR0.45

TP8271 PAD_CR0.45
TP7548 PAD_CR0.45
TP7547 PAD_CR0.45
TP7549 PAD_CR0.45
TP7551 PAD_CR0.45
TP7550 PAD_CR0.45
TP7552 PAD_CR0.45
TP7553 PAD_CR0.45
TP7554 PAD_CR0.45
TP7555 PAD_CR0.45
TP7558 PAD_CR0.45
TP7557 PAD_CR0.45
TP7559 PAD_CR0.45
TP7560 PAD_CR0.45
TP7561 PAD_CR0.45
TP7565 PAD_CR0.45
TP7562 PAD_CR0.45
TP7566 PAD_CR0.45
TP7564 PAD_CR0.45
TP7568 PAD_CR0.45
TP7569 PAD_CR0.45
TP7567 PAD_CR0.45
TP7573 PAD_CR0.45
TP7570 PAD_CR0.45
TP7574 PAD_CR0.45
TP7572 PAD_CR0.45
TP7577 PAD_CR0.45
TP7576 PAD_CR0.45
TP7578 PAD_CR0.45

TP7581 PAD_CR0.45
TP7579 PAD_CR0.45
TP7580 PAD_CR0.45
TP7584 PAD_CR0.45
TP7583 PAD_CR0.45
TP7585 PAD_CR0.45
TP7582 PAD_CR0.45
TP7586 PAD_CR0.45
TP7587 PAD_CR0.45
TP7588 PAD_CR0.45
TP7589 PAD_CR0.45
TP7591 PAD_CR0.45
TP7590 PAD_CR0.45
TP7592 PAD_CR0.45
TP7593 PAD_CR0.45
TP7594 PAD_CR0.45
TP7598 PAD_CR0.45
TP7595 PAD_CR0.45
TP7597 PAD_CR0.45
TP7601 PAD_CR0.45
TP7596 PAD_CR0.45
TP7600 PAD_CR0.45
TP7605 PAD_CR0.45
TP7606 PAD_CR0.45
TP7604 PAD_CR0.45
TP7609 PAD_CR0.45
TP7608 PAD_CR0.45
TP7607 PAD_CR0.45
TP7610 PAD_CR0.45
TP7611 PAD_CR0.45

TP8314 PAD_CR0.45
TP7612 PAD_CR0.45
TP7613 PAD_CR0.45
TP7617 PAD_CR0.45
TP7616 PAD_CR0.45
TP7618 PAD_CR0.45
TP7615 PAD_CR0.45
TP7619 PAD_CR0.45
TP7620 PAD_CR0.45
TP7621 PAD_CR0.45
TP7622 PAD_CR0.45
TP7624 PAD_CR0.45
TP7623 PAD_CR0.45
TP7625 PAD_CR0.45
TP7628 PAD_CR0.45
TP7626 PAD_CR0.45
TP7627 PAD_CR0.45
TP7631 PAD_CR0.45
TP7629 PAD_CR0.45
TP7630 PAD_CR0.45
TP7634 PAD_CR0.45
TP7633 PAD_CR0.45
TP7635 PAD_CR0.45
TP7638 PAD_CR0.45
TP7639 PAD_CR0.45
TP7636 PAD_CR0.45
TP7637 PAD_CR0.45
TP7641 PAD_CR0.45
TP7640 PAD_CR0.45
TP7643 PAD_CR0.45
TP7642 PAD_CR0.45
TP7644 PAD_CR0.45

TP7847 PAD_CR0.45
TP7645 PAD_CR0.45
TP7646 PAD_CR0.45
TP7650 PAD_CR0.45
TP7649 PAD_CR0.45
TP7651 PAD_CR0.45
TP7652 PAD_CR0.45
TP7653 PAD_CR0.45
TP7654 PAD_CR0.45
TP7655 PAD_CR0.45
TP7657 PAD_CR0.45
TP7658 PAD_CR0.45
TP7662 PAD_CR0.45
TP7659 PAD_CR0.45
TP7660 PAD_CR0.45
TP7664 PAD_CR0.45
TP7661 PAD_CR0.45
TP7665 PAD_CR0.45
TP7663 PAD_CR0.45
TP7667 PAD_CR0.45
TP7668 PAD_CR0.45
TP7672 PAD_CR0.45
TP7671 PAD_CR0.45
TP7673 PAD_CR0.45
TP7674 PAD_CR0.45
TP7675 PAD_CR0.45
TP7676 PAD_CR0.45
TP7677 PAD_CR0.45

TP7763 PAD_CR0.45
TP7765 PAD_CR0.45
TP7767 PAD_CR0.45
TP7769 PAD_CR0.45
TP7771 PAD_CR0.45
TP7773 PAD_CR0.45
TP7775 PAD_CR0.45
TP7777 PAD_CR0.45
TP7779 PAD_CR0.45
TP7781 PAD_CR0.45
TP7783 PAD_CR0.45
TP7785 PAD_CR0.45
TP7787 PAD_CR0.45
TP7789 PAD_CR0.45
TP7791 PAD_CR0.45
TP7793 PAD_CR0.45
TP7795 PAD_CR0.45
TP7797 PAD_CR0.45
TP7799 PAD_CR0.45
TP7801 PAD_CR0.45
TP7803 PAD_CR0.45
TP7805 PAD_CR0.45
TP7807 PAD_CR0.45
TP7809 PAD_CR0.45
TP7811 PAD_CR0.45
TP7813 PAD_CR0.45
TP7815 PAD_CR0.45
TP7817 PAD_CR0.45
TP7819 PAD_CR0.45
TP7821 PAD_CR0.45
TP7823 PAD_CR0.45
TP7825 PAD_CR0.45
TP7827 PAD_CR0.45

TP7784 PAD_CR0.45
TP7766 PAD_CR0.45
TP7768 PAD_CR0.45
TP7770 PAD_CR0.45
TP7772 PAD_CR0.45
TP7774 PAD_CR0.45
TP7776 PAD_CR0.45
TP7778 PAD_CR0.45
TP7780 PAD_CR0.45
TP7782 PAD_CR0.45
TP7786 PAD_CR0.45
TP7788 PAD_CR0.45
TP7790 PAD_CR0.45
TP7792 PAD_CR0.45
TP7794 PAD_CR0.45
TP7796 PAD_CR0.45
TP7798 PAD_CR0.45
TP7800 PAD_CR0.45
TP7802 PAD_CR0.45
TP7804 PAD_CR0.45
TP7806 PAD_CR0.45
TP7808 PAD_CR0.45
TP7810 PAD_CR0.45
TP7812 PAD_CR0.45
TP7814 PAD_CR0.45
TP7816 PAD_CR0.45
TP7818 PAD_CR0.45
TP7820 PAD_CR0.45
TP7822 PAD_CR0.45
TP7824 PAD_CR0.45
TP7826 PAD_CR0.45
TP7828 PAD_CR0.45

TP7829 PAD_CR0.45
TP7831 PAD_CR0.45
TP7833 PAD_CR0.45
TP7835 PAD_CR0.45
TP7837 PAD_CR0.45
TP7839 PAD_CR0.45
TP7841 PAD_CR0.45
TP7843 PAD_CR0.45
TP7847 PAD_CR0.45
TP7849 PAD_CR0.45
TP7851 PAD_CR0.45
TP7853 PAD_CR0.45
TP7855 PAD_CR0.45
TP7857 PAD_CR0.45
TP7859 PAD_CR0.45
TP7861 PAD_CR0.45
TP7863 PAD_CR0.45
TP7865 PAD_CR0.45
TP7867 PAD_CR0.45
TP7869 PAD_CR0.45
TP7871 PAD_CR0.45
TP7873 PAD_CR0.45
TP7875 PAD_CR0.45
TP7877 PAD_CR0.45
TP7879 PAD_CR0.45
TP7881 PAD_CR0.45
TP7883 PAD_CR0.45
TP7885 PAD_CR0.45
TP7887 PAD_CR0.45
TP7889 PAD_CR0.45
TP7891 PAD_CR0.45
TP7893 PAD_CR0.45

TP7835 PAD_CR0.45
TP7832 PAD_CR0.45
TP7834 PAD_CR0.45
TP7836 PAD_CR0.45
TP7838 PAD_CR0.45
TP7840 PAD_CR0.45
TP7842 PAD_CR0.45
TP7844 PAD_CR0.45
TP7846 PAD_CR0.45
TP7848 PAD_CR0.45
TP7850 PAD_CR0.45
TP7852 PAD_CR0.45
TP7854 PAD_CR0.45
TP7856 PAD_CR0.45
TP7858 PAD_CR0.45
TP7860 PAD_CR0.45
TP7862 PAD_CR0.45
TP7864 PAD_CR0.45
TP7866 PAD_CR0.45
TP7868 PAD_CR0.45
TP7870 PAD_CR0.45
TP7872 PAD_CR0.45
TP7874 PAD_CR0.45
TP7876 PAD_CR0.45
TP7878 PAD_CR0.45
TP7880 PAD_CR0.45
TP7882 PAD_CR0.45
TP7884 PAD_CR0.45
TP7886 PAD_CR0.45
TP7888 PAD_CR0.45
TP7890 PAD_CR0.45
TP7892 PAD_CR0.45
TP7894 PAD_CR0.45

TP8035 PAD_CR0.45
TP8033 PAD_CR0.45
TP8037 PAD_CR0.45
TP8039 PAD_CR0.45
TP8041 PAD_CR0.45
TP8043 PAD_CR0.45
TP8045 PAD_CR0.45
TP8047 PAD_CR0.45
TP8049 PAD_CR0.45
TP8051 PAD_CR0.45
TP8053 PAD_CR0.45
TP8055 PAD_CR0.45
TP8057 PAD_CR0.45
TP8059 PAD_CR0.45
TP8061 PAD_CR0.45
TP8063 PAD_CR0.45
TP8065 PAD_CR0.45
TP8067 PAD_CR0.45
TP8069 PAD_CR0.45
TP8071 PAD_CR0.45
TP8073 PAD_CR0.45
TP8075 PAD_CR0.45
TP8077 PAD_CR0.45
TP8079 PAD_CR0.45
TP8081 PAD_CR0.45
TP8083 PAD_CR0.45
TP8085 PAD_CR0.45
TP8087 PAD_CR0.45
TP8089 PAD_CR0.45
TP8091 PAD_CR0.45
TP8093 PAD_CR0.45
TP8095 PAD_CR0.45
TP8097 PAD_CR0.45
TP8099 PAD_CR0.45
TP8101 PAD_CR0.45
TP8103 PAD_CR0.45
TP8105 PAD_CR0.45
TP8107 PAD_CR0.45
TP8109 PAD_CR0.45
TP8111 PAD_CR0.45
TP8113 PAD_CR0.45
TP8115 PAD_CR0.45
TP8117 PAD_CR0.45
TP8119 PAD_CR0.45
TP8121 PAD_CR0.45
TP8123 PAD_CR0.45
TP8125 PAD_CR0.45
TP8127 PAD_CR0.45
TP8129 PAD_CR0.45
TP8131 PAD_CR0.45
TP8133 PAD_CR0.45
TP8135 PAD_CR0.45
TP8137 PAD_CR0.45
TP8139 PAD_CR0.45
TP8141 PAD_CR0.45
TP8143 PAD_CR0.45
TP8145 PAD_CR0.45
TP8147 PAD_CR0.45
TP8149 PAD_CR0.45
TP8151 PAD_CR0.45
TP8153 PAD_CR0.45
TP8155 PAD_CR0.45
TP8157 PAD_CR0.45

TP8052 PAD_CR0.45
TP8064 PAD_CR0.45
TP8066 PAD_CR0.45
TP8068 PAD_CR0.45
TP8070 PAD_CR0.45
TP8074 PAD_CR0.45
TP8076 PAD_CR0.45
TP8078 PAD_CR0.45
TP8082 PAD_CR0.45
TP8086 PAD_CR0.45
TP8088 PAD_CR0.45
TP8090 PAD_CR0.45
TP8092 PAD_CR0.45
TP8094 PAD_CR0.45
TP8096 PAD_CR0.45
TP8098 PAD_CR0.45
TP8100 PAD_CR0.45
TP8102 PAD_CR0.45
TP8104 PAD_CR0.45
TP8106 PAD_CR0.45
TP8108 PAD_CR0.45
TP8112 PAD_CR0.45
TP8110 PAD_CR0.45
TP8114 PAD_CR0.45
TP8116 PAD_CR0.45
TP8118 PAD_CR0.45
TP8120 PAD_CR0.45
TP8122 PAD_CR0.45
TP8124 PAD_CR0.45
TP8126 PAD_CR0.45
TP8128 PAD_CR0.45
TP8130 PAD_CR0.45
TP8132 PAD_CR0.45
TP8134 PAD_CR0.45
TP8136 PAD_CR0.45
TP8138 PAD_CR0.45
TP8140 PAD_CR0.45
TP8142 PAD_CR0.45
TP8144 PAD_CR0.45
TP8146 PAD_CR0.45
TP8148 PAD_CR0.45
TP8150 PAD_CR0.45
TP8152 PAD_CR0.45
TP8154 PAD_CR0.45
TP8156 PAD_CR0.45
TP8158 PAD_CR0.45

Title	<Title>		
Size A1	Document Number <Doc>		Rev <Rev Code>
Date: Monday, December 23, 2019		Sheet 75 of 75	

N78 N79 ANT7

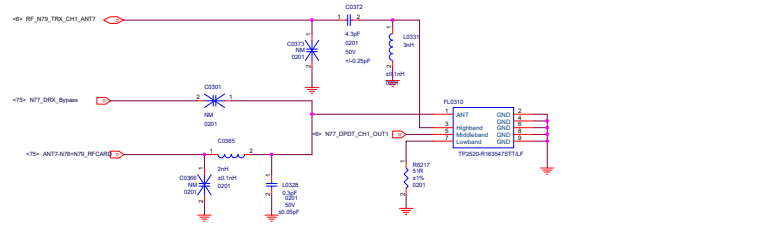

N41 DPDT1
三明治

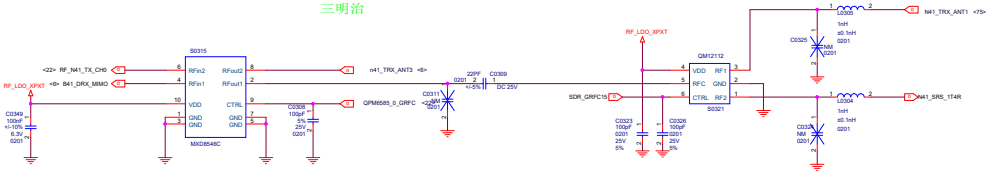

n41 TRX+n78 TRX+n79 TRX ANT3

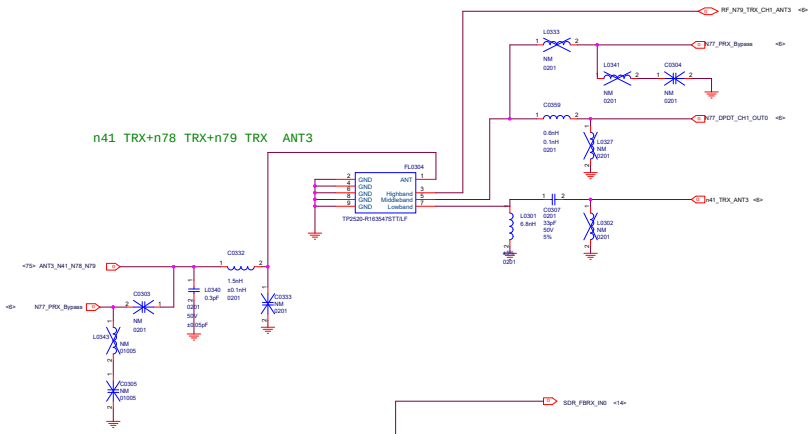

n78 DPDT2
三明治

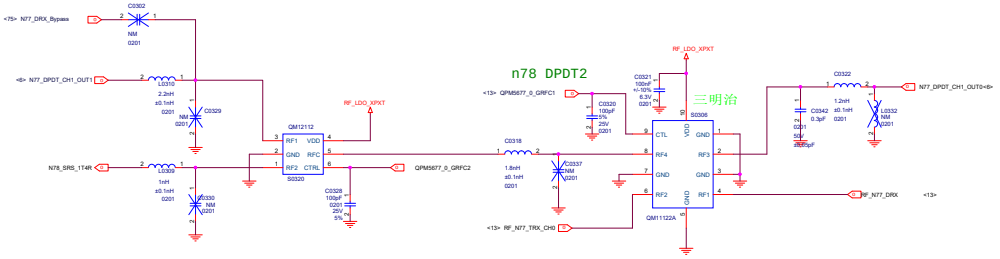

N79 DPDT1
三明治

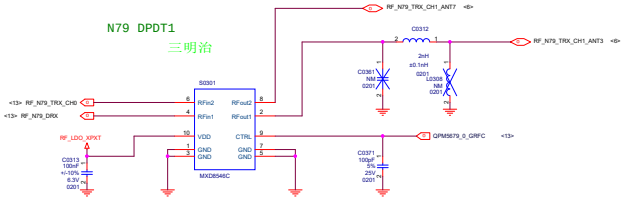

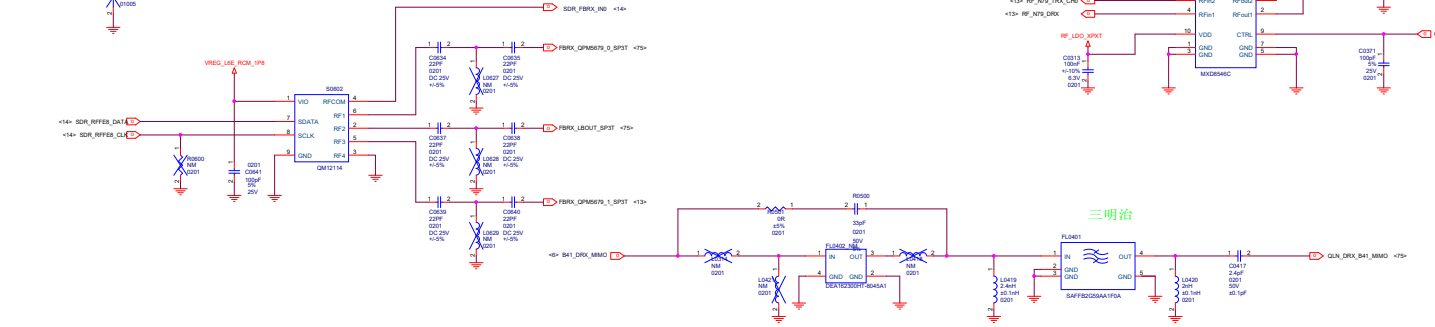

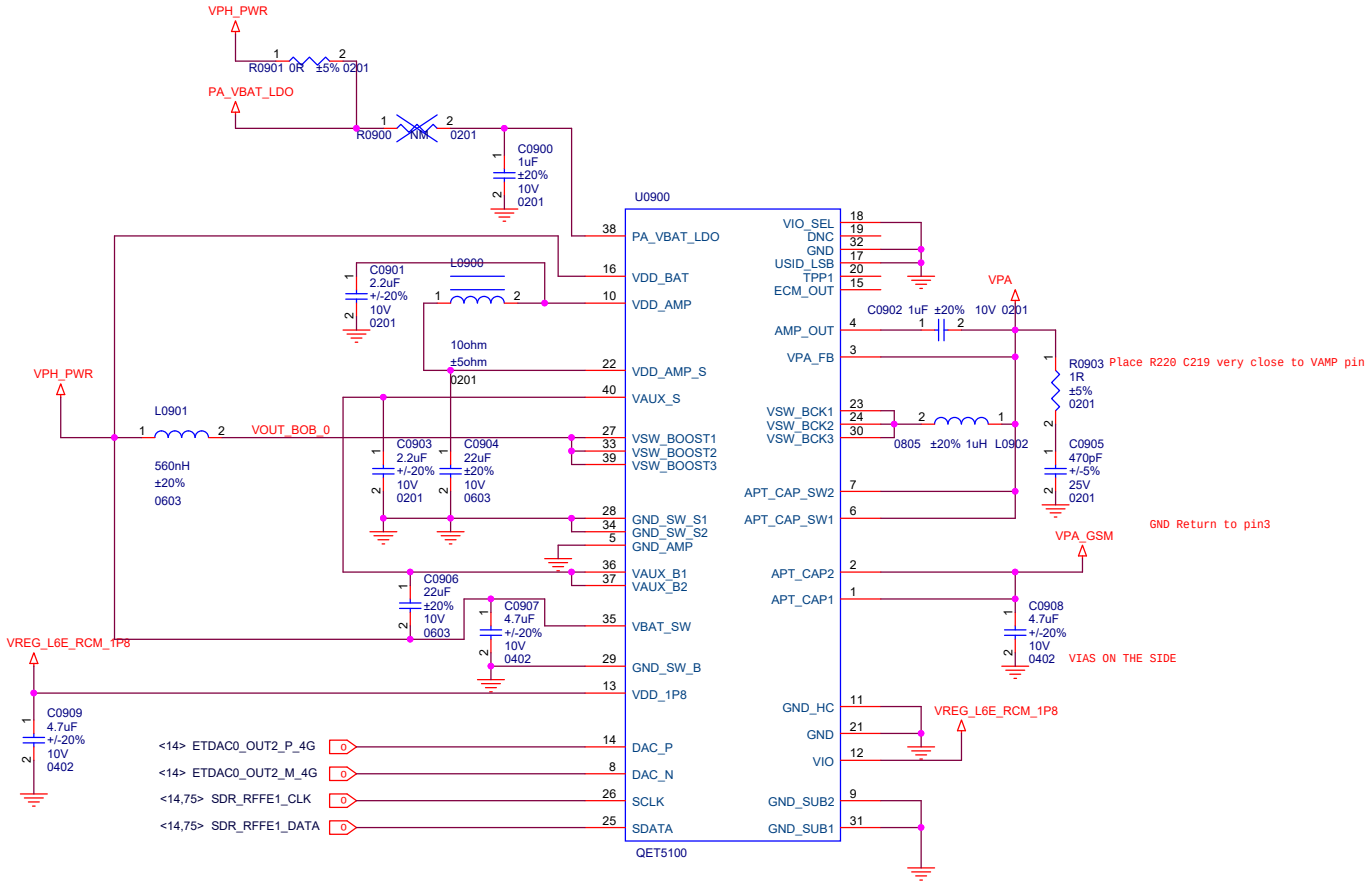

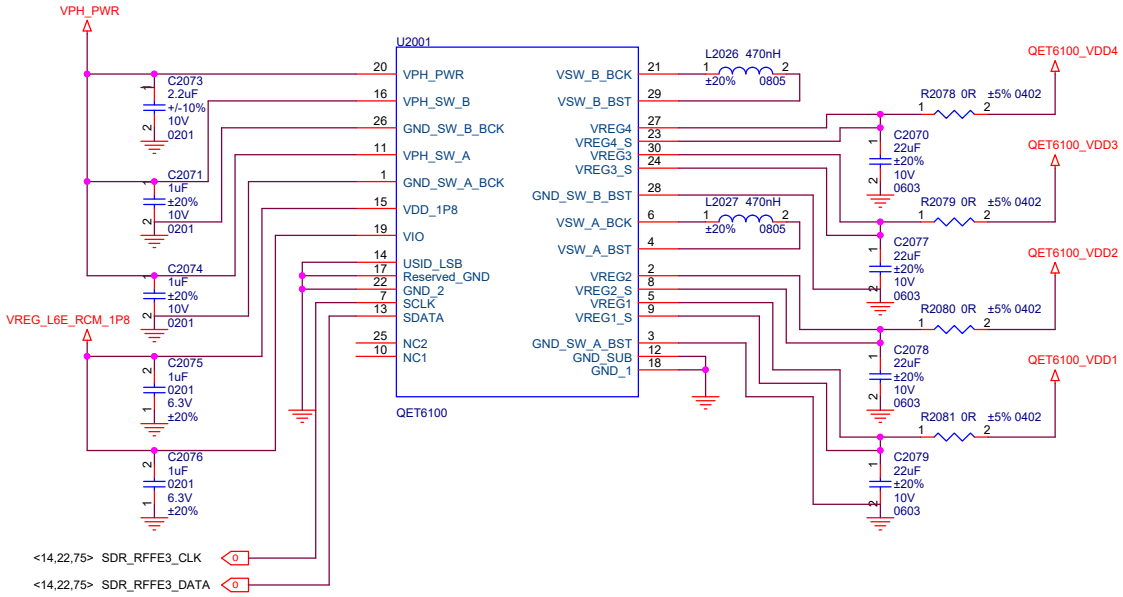

Title	J11 MAIN	
Size A3	Document Number RF DC-DC	Rev P0
Date: Friday, December 27, 2019	Sheet	

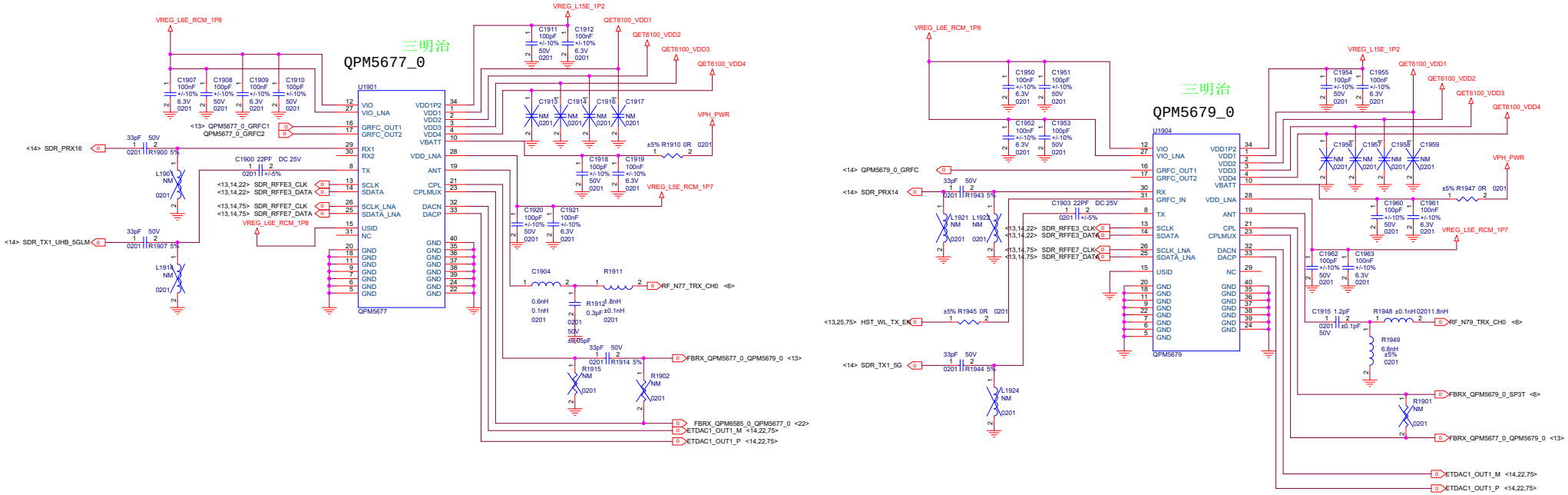

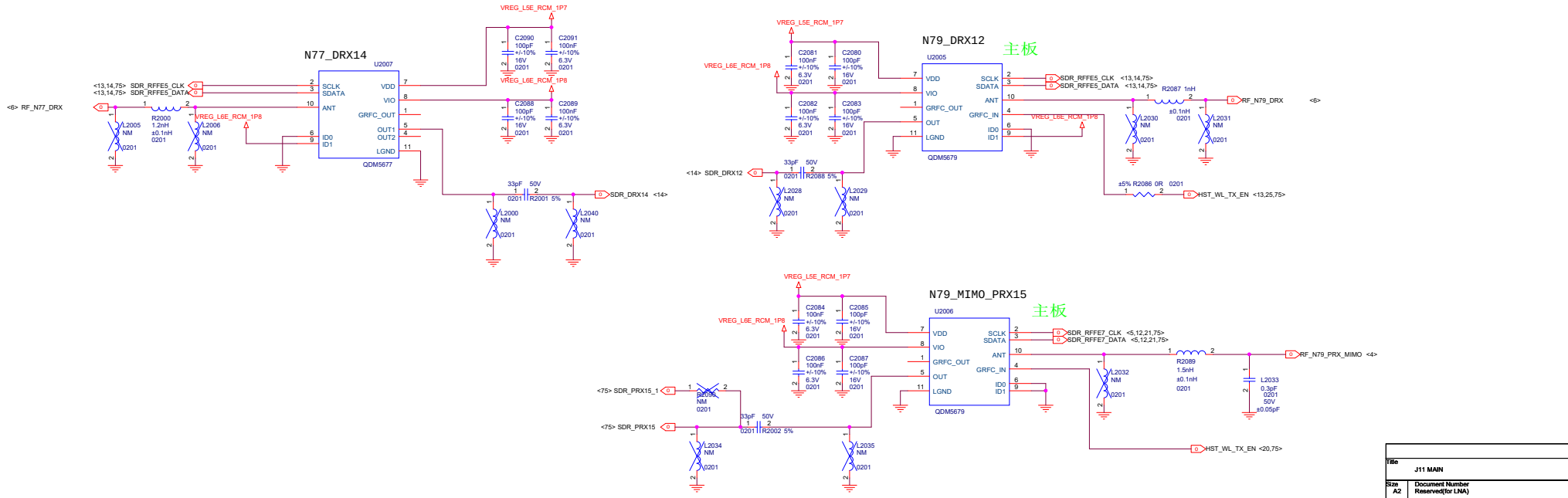

Title	J11 MAIN		
Size A2	Document Number Reserved(for LNA)		Rev P0
Date: Friday, December 27, 2019	Sheet 13 of 74		

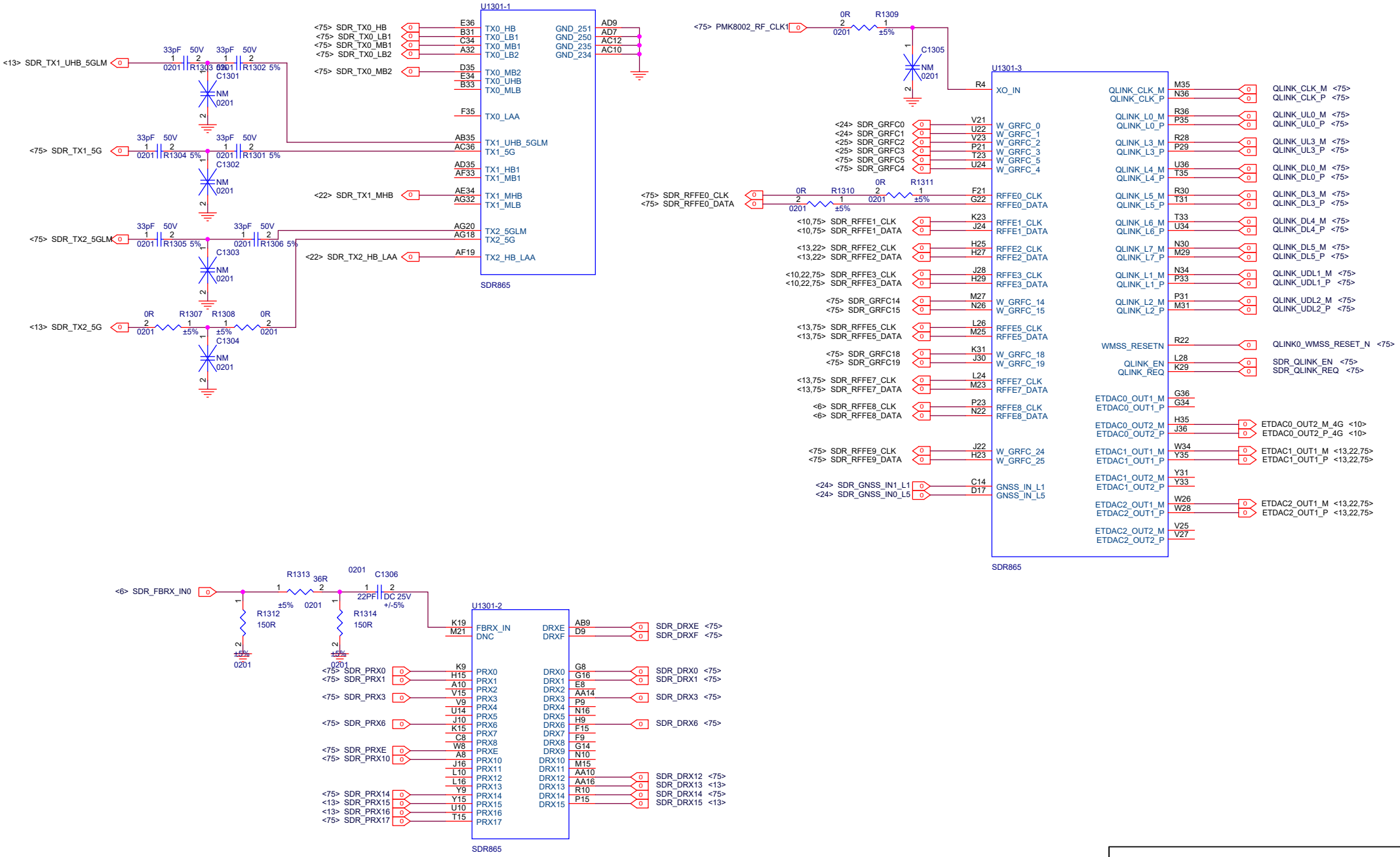

Title	J11 MAIN
Size A3	Document Number WTR Interface
Rev	P0
Date:	Friday, December 27, 2019
Sheet	14 of 74

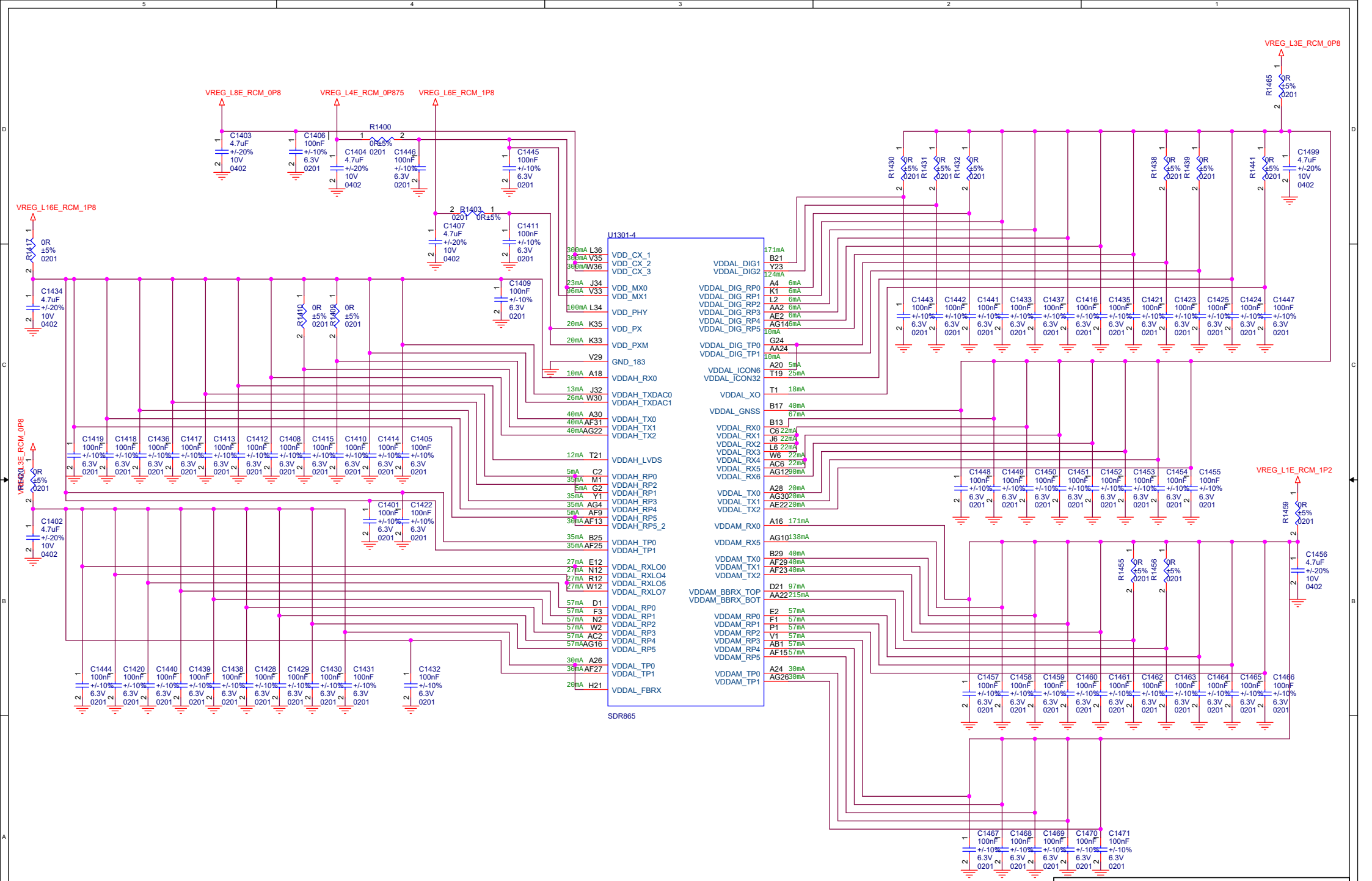

Title: F1 MAIN

Size: A3 | Document Number: WTR PWR | Rev: P0

Date: Friday, December 27, 2019 | Sheet 15 of 74

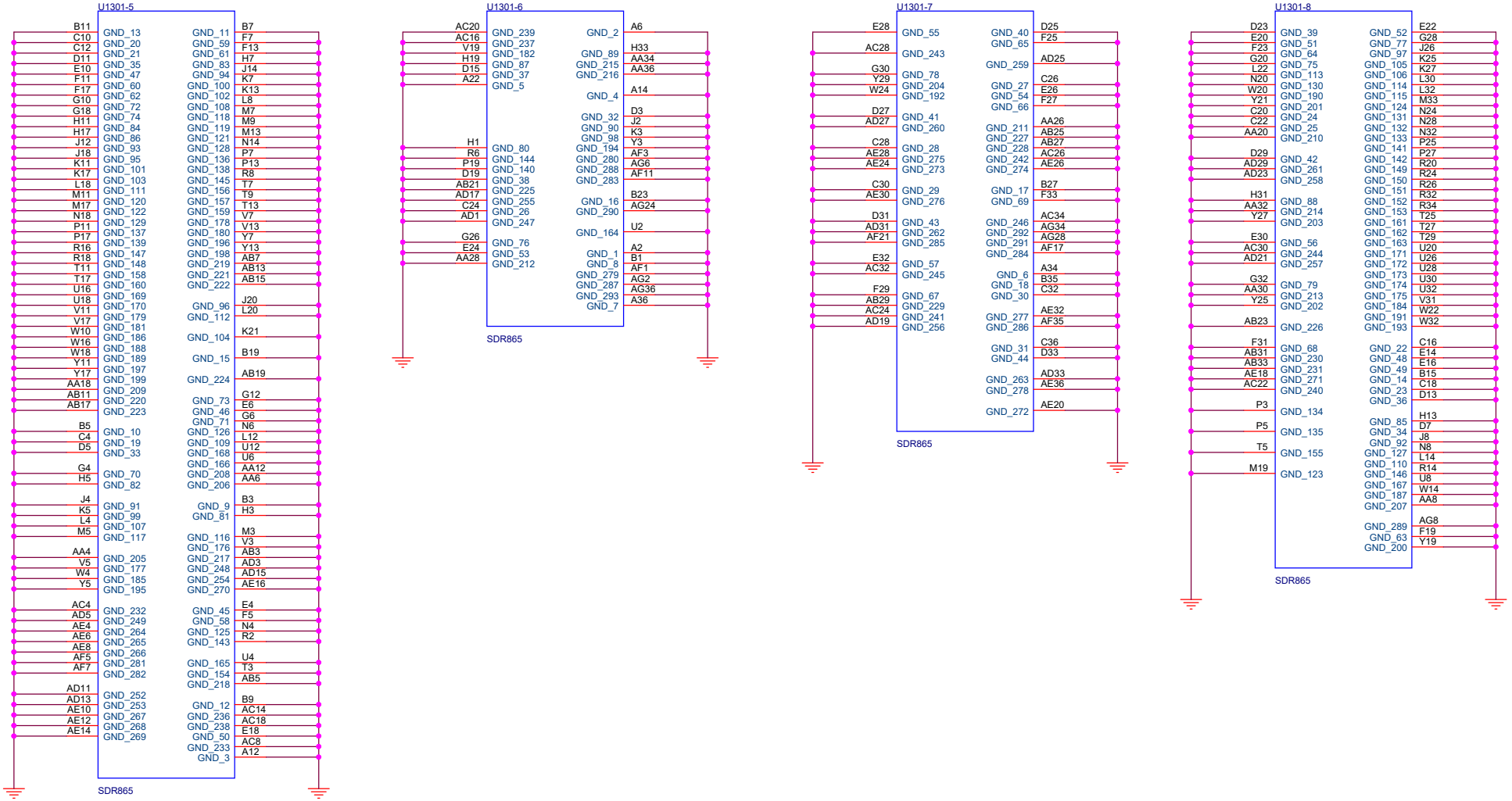

Title	J11 MAIN	
Size A3	Document Number Reserved(for WTR)	Rev P0
Date: Friday, December 27, 2019	Sheet	

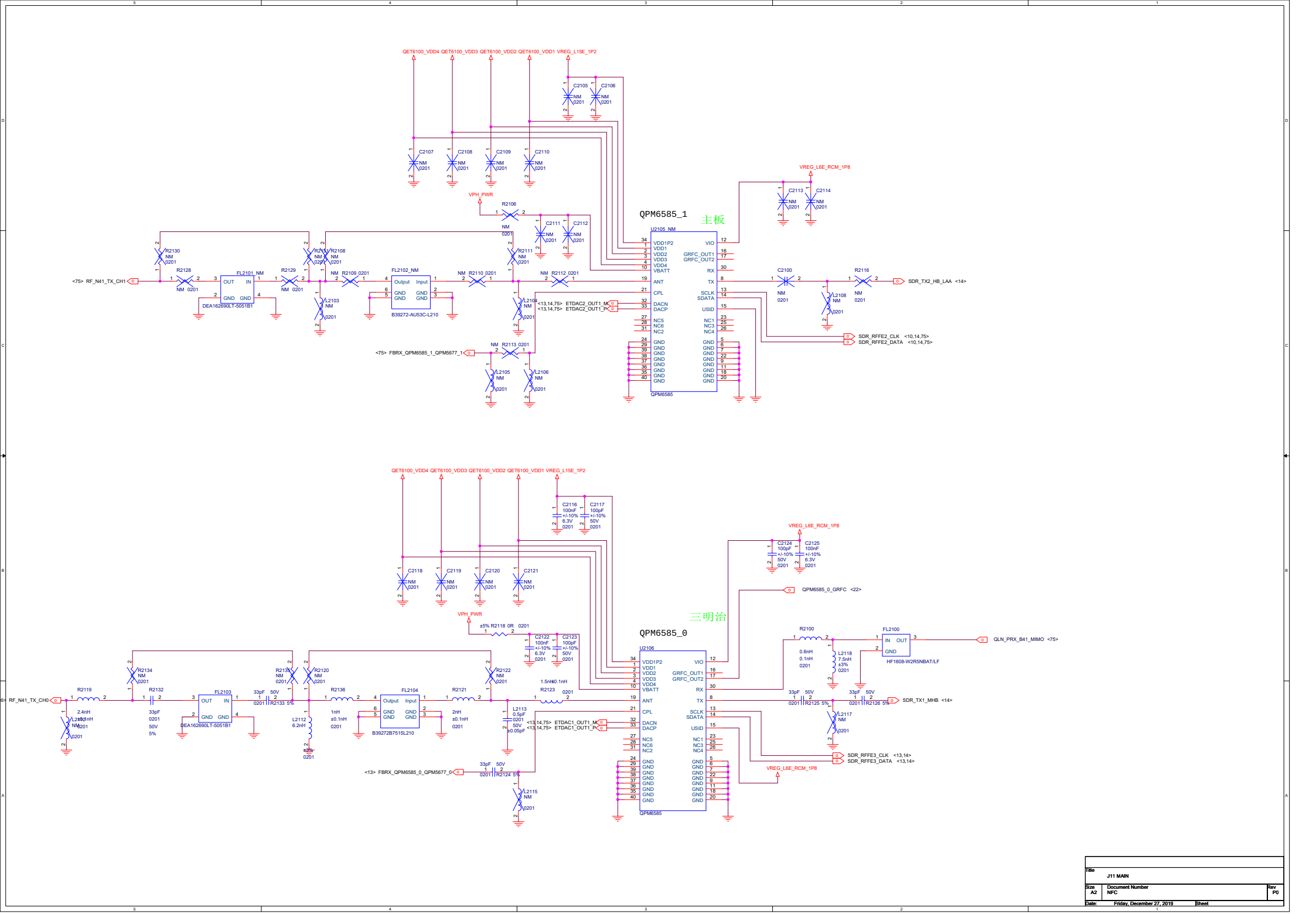

Title	J11 MAIN	
Size A2	Document Number NFC	Rev P0
Date: Friday, December 27, 2019	Sheet	

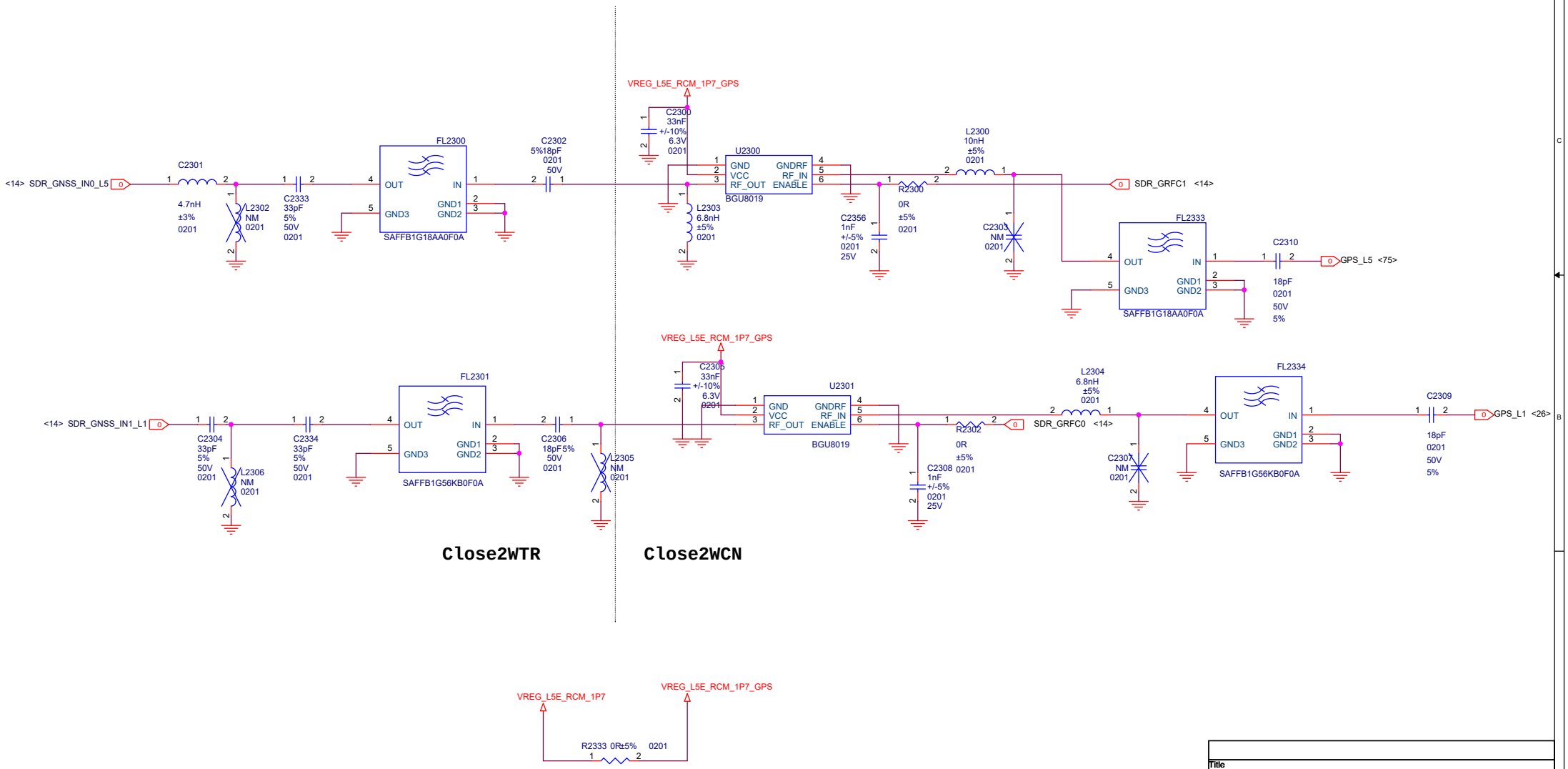

Title	J11 MAIN	
Size A3	Document Number GPS	Rev P0
Date: Friday, December 27, 2019	Sheet	

放U2400旁边

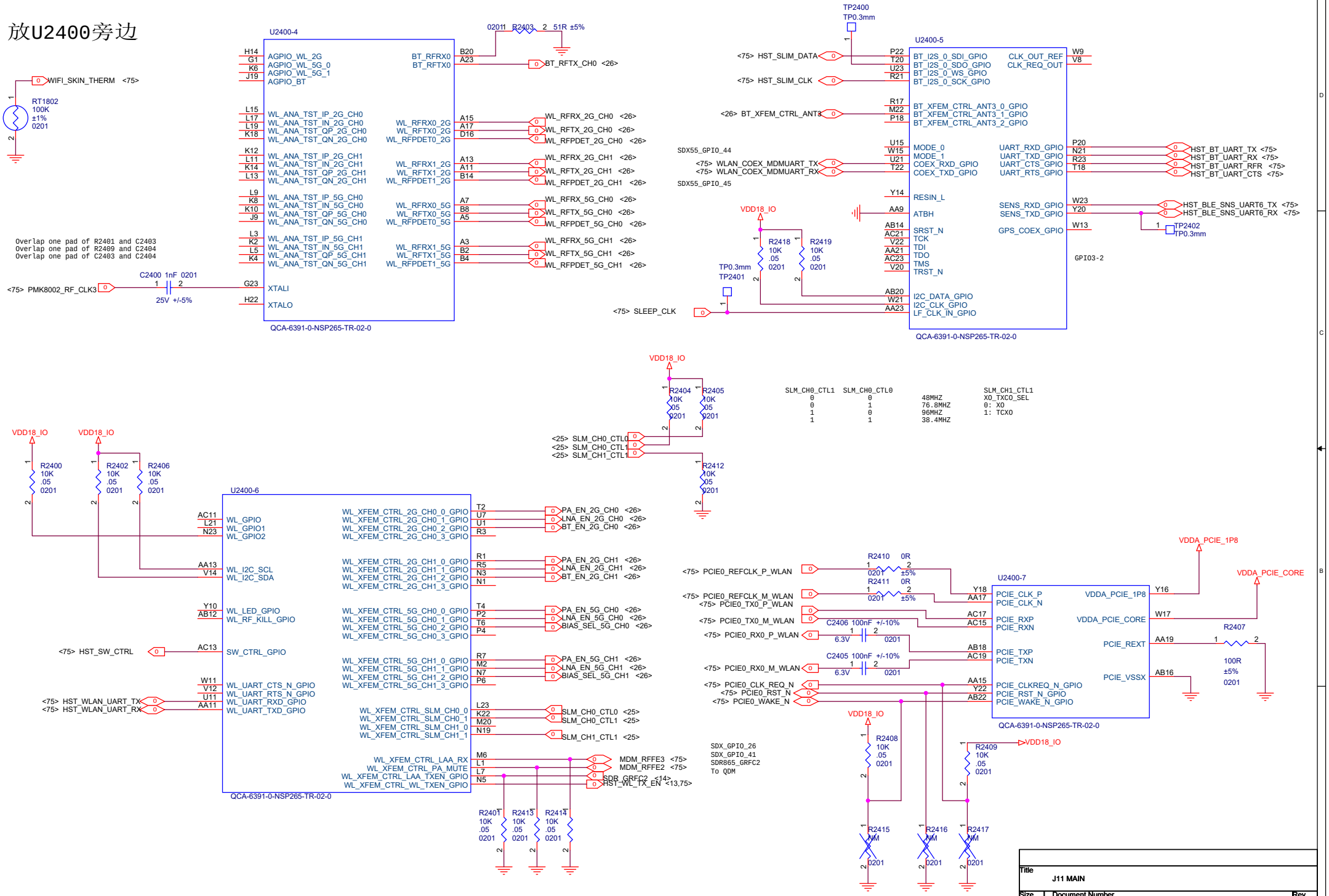

Title	J11 MAIN		
Size A3	Document Number WIFI Interface		Rev P0
Date: Friday, December 27, 2019	Sheet 25 of 74		

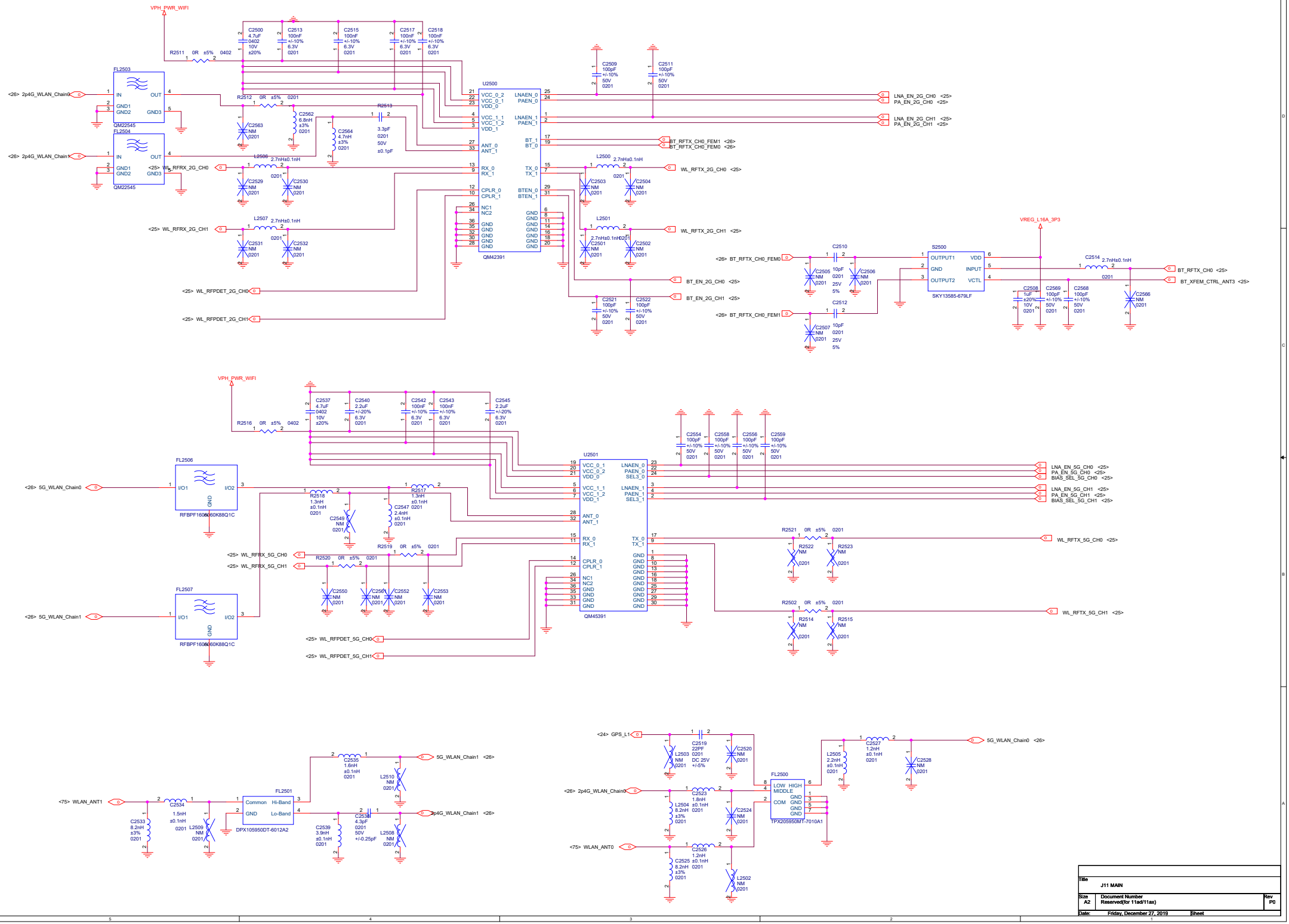

Title	J11 MAIN	
Size A2	Document Number Reserved(for 11ad/11ax)	Rev P0
Date: Friday, December 27, 2019	Sheet	

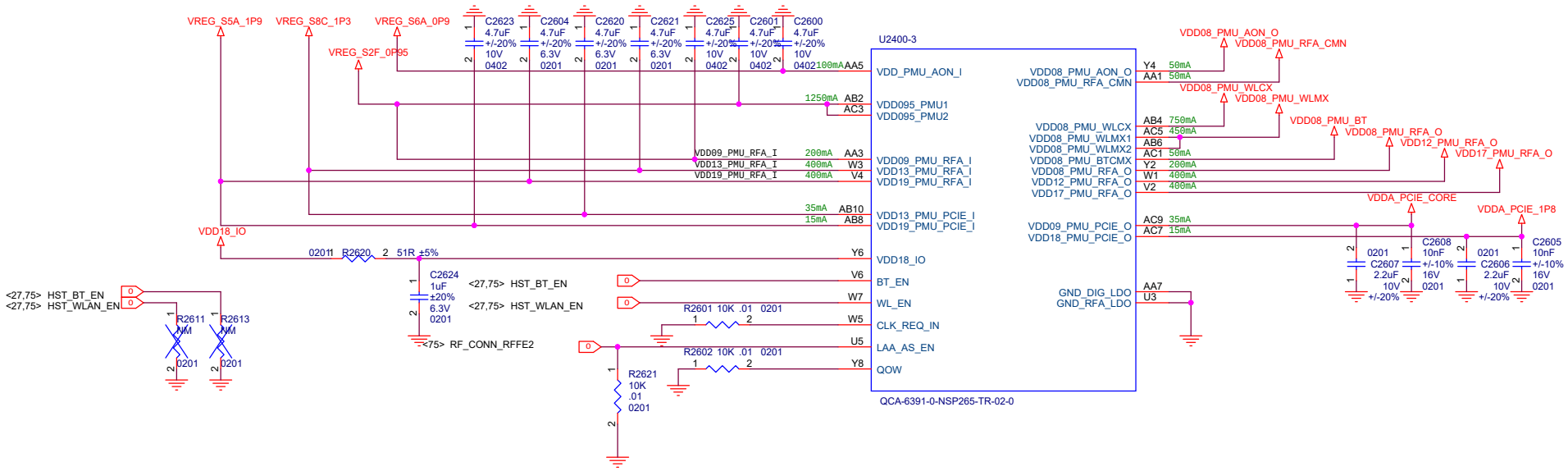

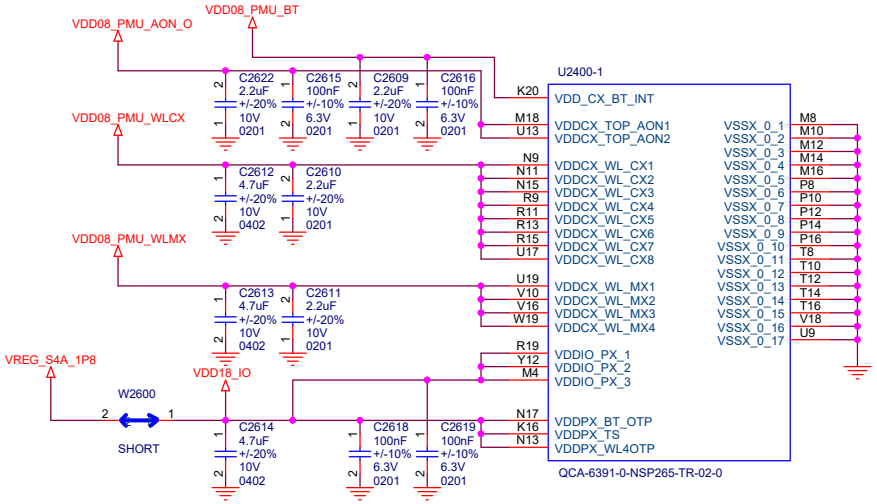

Title	J11 MAIN	
Size A3	Document Number WIFI Decouping	Rev P0
Date: Friday, December 27, 2019	Sheet 27 of 74	

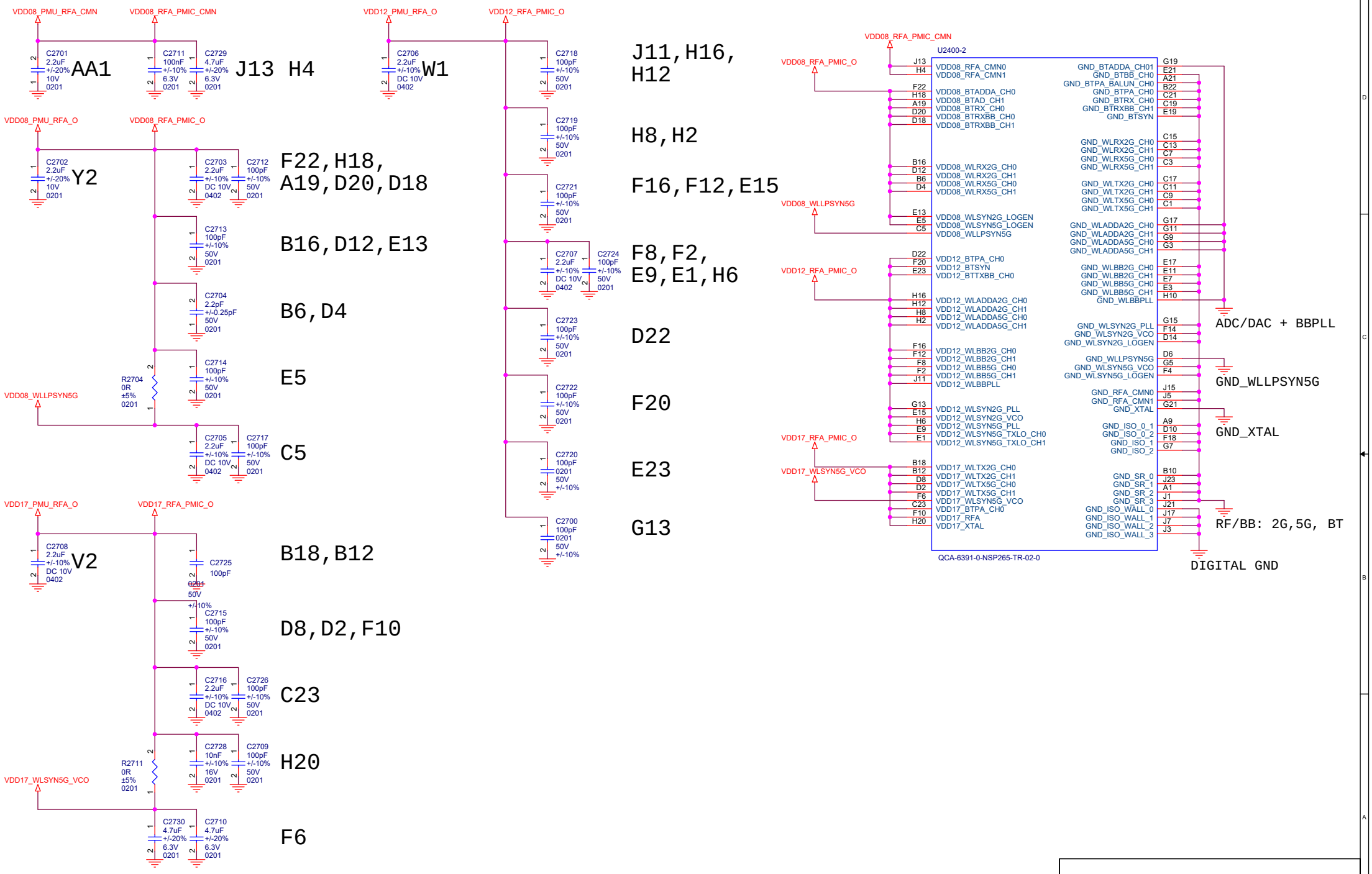

Title	F1 MAIN	
Size A3	Document Number Reserved(for 11ad/11ax)	Rev P0
Date: Friday, December 27, 2019	Sheet 28 of 74	

PRESSURE

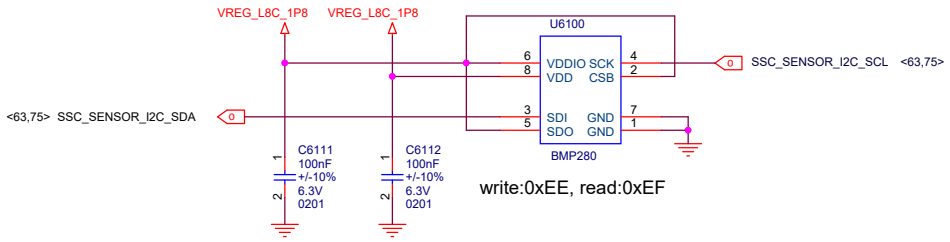

FLICKER

FLASH

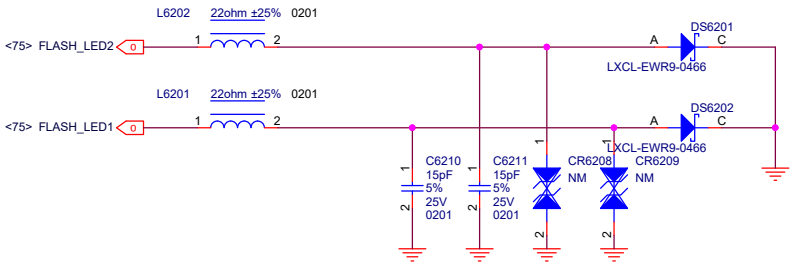

ALS

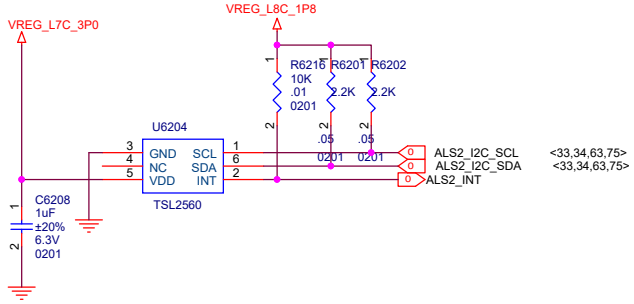

COMPASS

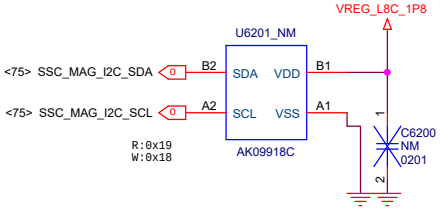

GND Testpoint

Shielding

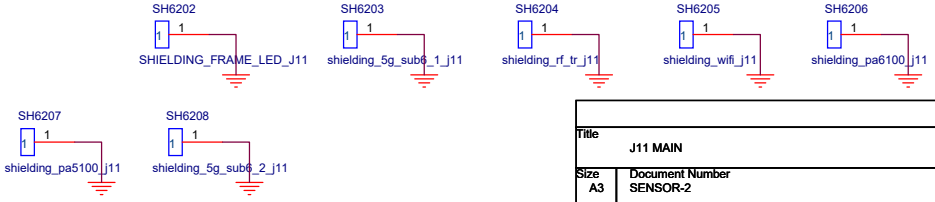

Title	J11 MAIN	
Size A3	Document Number SENSOR-2	Rev P0
Date: Friday, December 27, 2019	Sheet 63 of 74	

WIFI

TP7400 PAD_CR0.45 — PCIE0_REFCLK_P_WLAN <37>
TP7401 PAD_CR0.45 — PCIE0_REFCLK_M_WLAN <37>
TP7402 PAD_CR0.45 — PCIE0_TX0_P_WLAN <37>
TP7403 PAD_CR0.45 — PCIE0_TX0_M_WLAN <37>
TP7404 PAD_CR0.45 — PCIE0_RX0_P_WLAN <37>
TP7405 PAD_CR0.45 — PCIE0_RX0_M_WLAN <37>
TP7406 PAD_CR0.45 — PCIE0_CLK_REQ_N <34>
TP7407 PAD_CR0.45 — PCIE0_RST_N <34>
TP7408 PAD_CR0.45 — PCIE0_WAKE_N <34>

TP7419 PAD_CR0.45 — HST_SW_CTRL <34>
TP7420 PAD_CR0.45 — HST_WLAN_UART_TX <34>
TP7421 PAD_CR0.45 — HST_WLAN_UART_RX <34>
TP7422 PAD_CR0.45 — HST_WLAN_DATA <34>
TP7423 PAD_CR0.45 — HST_SLIM_CLK <34>
TP7424 PAD_CR0.45 — WLAN_COEX_MDMUART_TX <17>
TP7425 PAD_CR0.45 — WLAN_COEX_MDMUART_RX <17>
TP7426 PAD_CR0.45 — HST_BT_UART_TX <33>
TP7427 PAD_CR0.45 — HST_BT_UART_RX <33>
TP7428 PAD_CR0.45 — HST_BT_UART_RFR <33>
TP7429 PAD_CR0.45 — HST_BT_UART_CTS <33>
TP7430 PAD_CR0.45 — HST_BLE_SNS_UART8_TX <34>
TP7431 PAD_CR0.45 — HST_BLE_SNS_UART8_RX <34>

TP7416 PAD_CR0.45 — GPS_LS <3>
TP7417 PAD_CR0.45 — WLAN_ANT0 <3>
TP7418 PAD_CR0.45 — WLAN_ANT1 <4>

TP7859 PAD_CR0.45 — PMK8002_RF_CLK3 <19>
TP7750 PAD_CR0.45 — MDM_RFFE3 <17>
TP7751 PAD_CR0.45 — MDM_RFFE2 <17>
TP7752 PAD_CR0.45 — HST_BT_PCM_CLK <32,43>
TP7753 PAD_CR0.45 — HST_BT_EN <33>
TP7754 PAD_CR0.45 — HST_WLAN_EN <33>
TP7755 PAD_CR0.45 — RF_CONN_RFFE2 <17>

RF

TP7432 PAD_CR0.45 — QLINK_CLK_M <17>
TP7433 PAD_CR0.45 — QLINK_CLK_P <17>
TP7434 PAD_CR0.45 — QLINK_UL0_M <17>
TP7435 PAD_CR0.45 — QLINK_UL0_P <17>
TP7436 PAD_CR0.45 — QLINK_UL3_M <17>
TP7437 PAD_CR0.45 — QLINK_UL3_P <17>
TP7438 PAD_CR0.45 — QLINK_DL0_M <17>
TP7439 PAD_CR0.45 — QLINK_DL0_P <17>
TP7440 PAD_CR0.45 — QLINK_DL3_M <17>
TP7441 PAD_CR0.45 — QLINK_DL3_P <17>
TP7442 PAD_CR0.45 — QLINK_DL4_M <17>
TP7443 PAD_CR0.45 — QLINK_DL4_P <17>
TP7444 PAD_CR0.45 — QLINK_DL5_M <17>
TP7445 PAD_CR0.45 — QLINK_DL5_P <17>
TP7446 PAD_CR0.45 — QLINK_UDL1_M <17>
TP7447 PAD_CR0.45 — QLINK_UDL1_P <17>
TP7448 PAD_CR0.45 — QLINK_UDL2_M <17>
TP7449 PAD_CR0.45 — QLINK_UDL2_P <17>
TP7450 PAD_CR0.45 — QLINK0_WMSS_RESET_N <17>
TP7451 PAD_CR0.45 — BDR_CLINK_EN <17>
TP7452 PAD_CR0.45 — BDR_CLINK_REQ <17>

TP7453 PAD_CR0.45 — BDR_RFFE1_CLK <8>
TP7455 PAD_CR0.45 — BDR_RFFE1_DATA <8>
TP7457 PAD_CR0.45 — BDR_RFFE2_CLK <20>
TP7458 PAD_CR0.45 — BDR_RFFE2_DATA <20>
TP7459 PAD_CR0.45 — BDR_RFFE5_CLK <5,12,21>
TP7460 PAD_CR0.45 — BDR_RFFE5_DATA <5,12,21>
TP7461 PAD_CR0.45 — BDR_RFFE7_CLK <11,20,21>
TP7462 PAD_CR0.45 — BDR_RFFE7_DATA <11,20,21>
TP7713 PAD_CR0.45 — BDR_RFFE0_CLK <17>
TP7714 PAD_CR0.45 — BDR_RFFE0_DATA <17>
TP7485 PAD_CR0.45 — BDR_RFFE9_CLK <7>
TP7484 PAD_CR0.45 — BDR_RFFE9_DATA <7>
TP7512 PAD_CR0.45 — PMK8002_RF_CLK1 <19>
TP7486 PAD_CR0.45 — HST_WL_TX_EN <20,21>
TP7471 PAD_CR0.45 — ETDAC2_OUT1_M <20>
TP7470 PAD_CR0.45 — ETDAC2_OUT1_P <20>
TP7473 PAD_CR0.45 — BDR_GRFC5 <4>
TP7474 PAD_CR0.45 — BDR_GRFC4 <4>
TP7475 PAD_CR0.45 — BDR_GRFC14 <4>
TP7477 PAD_CR0.45 — BDR_GRFC18 <4>
TP8096 PAD_CR0.45 — BDR_GRFC19 <4>
TP8082 PAD_CR0.45 — BDR_GRFC3 <8>
TP8095 PAD_CR0.45 — N78_SRS_1T4R <4>
TP8093 PAD_CR0.45 — N41_SRS_1T4R <4>

TP7728 PAD_CR0.45 — N41_TRX_ANT1 <4>
TP7724 PAD_CR0.45 — ANT3_N41_N78_N79 <4>
TP7483 PAD_CR0.45 — ANT7-N78-N79_RFCARD <4>
TP7481 PAD_CR0.45 — RF_N41_TX_CH1 <8>
TP7479 PAD_CR0.45 — FBRX_QPM5585_1_QPM5677_1 <20>
TP7482 PAD_CR0.45 — QLN_DRX_B41_MIMO <12>
TP7712 PAD_CR0.45 — QLN_PRX_B41_MIMO <11>
TP7486 PAD_CR0.45 — FBRX_LBOUT_SP3T <7>
TP7487 PAD_CR0.45 — FBRX_QPM5579_1_SP3T <20>
TP7488 PAD_CR0.45 — BDR_TX0_HB <4>
TP7489 PAD_CR0.45 — BDR_TX0_LB <4>
TP7491 PAD_CR0.45 — BDR_TX0_MB1 <8>
TP7490 PAD_CR0.45 — BDR_TX0_LB2 <8>
TP7492 PAD_CR0.45 — BDR_TX0_MB2 <7>
TP7493 PAD_CR0.45 — BDR_TX2_5G <20>
TP7498 PAD_CR0.45 — BDR_TX2_5GLM <20>
TP7497 PAD_CR0.45 — BDR_PRX10 <11>
TP7500 PAD_CR0.45 — BDR_PRX8 <11>
TP7501 PAD_CR0.45 — BDR_PRX9 <11>
TP7480 PAD_CR0.45 — BDR_PRX0 <11>
TP7503 PAD_CR0.45 — BDR_PRX1 <11>
TP7505 PAD_CR0.45 — BDR_DRX13 <21>
TP7502 PAD_CR0.45 — BDR_PRX15_1 <20>
TP7716 PAD_CR0.45 — BDR_PRX17 <20>
TP7504 PAD_CR0.45 — BDR_DRX0 <12>
TP7506 PAD_CR0.45 — BDR_DRX9 <12>
TP7507 PAD_CR0.45 — BDR_DRX8 <12>
TP7508 PAD_CR0.45 — BDR_DRX0 <12>
TP7509 PAD_CR0.45 — BDR_DRX1 <12>
TP7511 PAD_CR0.45 — BDR_DRX3 <12>
TP7718 PAD_CR0.45 — BDR_DRX15 <21>
TP8125 PAD_CR0.45 — RF_N79_PRX_MIMO <20>
TP7717 PAD_CR0.45 — BDR_PRX3 <11>

jidai

TP7678 PAD_CR0.45 — ALS2_INT <34>
TP7719 PAD_CR0.45 — ALS2_I2C_SDA <34>
TP7720 PAD_CR0.45 — ALS2_I2C_SCL <34>
TP7721 PAD_CR0.45 — SSC_SENSOR_I2C_SDA <33,34,62,66>
TP7722 PAD_CR0.45 — SSC_SENSOR_I2C_SCL <33,34,62,66>
TP7723 PAD_CR0.45
TP7728 PAD_CR0.45
TP7732 PAD_CR0.45 — SSC_MAG_I2C_SCL <33,34,62>
TP7733 PAD_CR0.45 — SSC_MAG_I2C_SDA <33,34,62>
TP7727 PAD_CR0.45 — WIFI_SKIN_THERM <19>
TP7730 PAD_CR0.45
TP7729 PAD_CR0.45 — FLASH_LED1 <51>
TP8295 PAD_CR0.45
TP7710 PAD_CR0.45 — FLASH_LED2 <51>
TP8296 PAD_CR0.45
TP8274 PAD_CR0.45
TP8232 PAD_CR0.45 — VREG_L7C_3P0

RF电源

TP7683 PAD_CR0.45 — VPH_PWR
TP7745 PAD_CR0.45
TP7746 PAD_CR0.45
TP7747 PAD_CR0.45
TP7748 PAD_CR0.45
TP7687 PAD_CR0.45 — QET6100_VDD1
TP8291 PAD_CR0.45
TP7688 PAD_CR0.45 — QET6100_VDD2
TP8292 PAD_CR0.45
TP7750 PAD_CR0.45 — VPH_PWR
TP7751 PAD_CR0.45
TP7752 PAD_CR0.45
TP7753 PAD_CR0.45
TP7689 PAD_CR0.45 — QET6100_VDD3
TP8293 PAD_CR0.45
TP7690 PAD_CR0.45 — QET6100_VDD4
TP8294 PAD_CR0.45
TP7884 PAD_CR0.45 — VIPA
TP7886 PAD_CR0.45
TP7885 PAD_CR0.45 — VIPA
TP7723 PAD_CR0.45

WIFI电源

TP7409 PAD_CR0.45 — VREG_L5E_RCM_1P7
TP7410 PAD_CR0.45 — VREG_S5A_1P9
TP7412 PAD_CR0.45 — VPH_PWR_WIFI
TP7735 PAD_CR0.45
TP7738 PAD_CR0.45
TP7743 PAD_CR0.45

TP7744 PAD_CR0.45
TP7738 PAD_CR0.45
TP7737 PAD_CR0.45
TP7413 PAD_CR0.45 — VREG_S2F_0P95
TP7992 PAD_CR0.45 — VREG_S8C_1P3
TP7415 PAD_CR0.45 — VREG_S6A_0P9
TP7756 PAD_CR0.45 — VREG_S4A_1P8

TP7856 PAD_CR0.45 — VREG_L16A_3P3

TP7756 PAD_CR0.45 — VPA_GSM
TP7757 PAD_CR0.45
TP7759 PAD_CR0.45
TP7845 PAD_CR0.45
TP7933 PAD_CR0.45

TP7832 PAD_CR0.45 — VREG_L8E_RCM_0P8
TP7893 PAD_CR0.45 — VREG_L4E_RCM_0P875
TP7894 PAD_CR0.45 — VREG_L9E_RCM_1P8
TP7895 PAD_CR0.45 — VREG_L3E_RCM_0P8
TP7896 PAD_CR0.45

TP7896 PAD_CR0.45 — VREG_L16E_RCM_1P8
TP7897 PAD_CR0.45 — VREG_L1E_RCM_1P2

TP7760 PAD_CR0.45 — PA_VBAT_LDO

TP7762 PAD_CR0.45 — VREG_L15E_1P2

TP7729 PAD_CR0.45 — VREG_L1E_1P2

TP7731 PAD_CR0.45 — VREG_L8C_1P8

TP7742 PAD_CR0.45 — RF_LDO_XPXT

TP7758 PAD_CR0.45
TP7895 PAD_CR0.45
TP7897 PAD_CR0.45
TP7899 PAD_CR0.45
TP7901 PAD_CR0.45
TP7903 PAD_CR0.45
TP7905 PAD_CR0.45
TP7907 PAD_CR0.45
TP7909 PAD_CR0.45
TP7911 PAD_CR0.45
TP7913 PAD_CR0.45
TP7915 PAD_CR0.45
TP7917 PAD_CR0.45
TP7919 PAD_CR0.45
TP7921 PAD_CR0.45
TP7923 PAD_CR0.45
TP7925 PAD_CR0.45
TP7927 PAD_CR0.45
TP7929 PAD_CR0.45
TP7931 PAD_CR0.45
TP7749 PAD_CR0.45
TP7935 PAD_CR0.45
TP7937 PAD_CR0.45
TP7939 PAD_CR0.45
TP7941 PAD_CR0.45
TP7943 PAD_CR0.45
TP7945 PAD_CR0.45
TP7947 PAD_CR0.45
TP7949 PAD_CR0.45
TP7951 PAD_CR0.45
TP7953 PAD_CR0.45
TP7955 PAD_CR0.45
TP7957 PAD_CR0.45
TP7959 PAD_CR0.45

TP7896 PAD_CR0.45
TP7898 PAD_CR0.45
TP7900 PAD_CR0.45
TP7902 PAD_CR0.45
TP7904 PAD_CR0.45
TP7906 PAD_CR0.45
TP7908 PAD_CR0.45
TP7910 PAD_CR0.45
TP7912 PAD_CR0.45
TP7914 PAD_CR0.45
TP7916 PAD_CR0.45
TP7918 PAD_CR0.45
TP7920 PAD_CR0.45
TP7922 PAD_CR0.45
TP7924 PAD_CR0.45
TP7926 PAD_CR0.45
TP7928 PAD_CR0.45
TP7930 PAD_CR0.45
TP7932 PAD_CR0.45
TP7934 PAD_CR0.45
TP7936 PAD_CR0.45
TP7938 PAD_CR0.45
TP7940 PAD_CR0.45
TP7942 PAD_CR0.45
TP7944 PAD_CR0.45
TP7946 PAD_CR0.45
TP7948 PAD_CR0.45
TP7950 PAD_CR0.45
TP7952 PAD_CR0.45
TP7954 PAD_CR0.45
TP7956 PAD_CR0.45
TP7958 PAD_CR0.45
TP7960 PAD_CR0.45

TP7228 PAD_CR0.45
TP7961 PAD_CR0.45
TP7964 PAD_CR0.45
TP7967 PAD_CR0.45
TP7970 PAD_CR0.45
TP7973 PAD_CR0.45
TP7976 PAD_CR0.45
TP7979 PAD_CR0.45
TP7982 PAD_CR0.45
TP7985 PAD_CR0.45
TP7988 PAD_CR0.45
TP7991 PAD_CR0.45
TP7994 PAD_CR0.45
TP7997 PAD_CR0.45
TP8000 PAD_CR0.45
TP8003 PAD_CR0.45
TP8006 PAD_CR0.45
TP8009 PAD_CR0.45
TP8012 PAD_CR0.45
TP8015 PAD_CR0.45
TP8018 PAD_CR0.45
TP8021 PAD_CR0.45
TP8024 PAD_CR0.45
TP8027 PAD_CR0.45
TP8030 PAD_CR0.45
TP8033 PAD_CR0.45
TP8036 PAD_CR0.45
TP8039 PAD_CR0.45
TP8042 PAD_CR0.45
TP8045 PAD_CR0.45
TP8048 PAD_CR0.45
TP8051 PAD_CR0.45
TP8054 PAD_CR0.45
TP8057 PAD_CR0.45

TP7962 PAD_CR0.45
TP7965 PAD_CR0.45
TP7968 PAD_CR0.45
TP7971 PAD_CR0.45
TP7974 PAD_CR0.45
TP7977 PAD_CR0.45
TP7980 PAD_CR0.45
TP7983 PAD_CR0.45
TP7986 PAD_CR0.45
TP7989 PAD_CR0.45
TP7992 PAD_CR0.45
TP7995 PAD_CR0.45
TP7998 PAD_CR0.45
TP8001 PAD_CR0.45
TP8004 PAD_CR0.45
TP8007 PAD_CR0.45
TP8010 PAD_CR0.45
TP8013 PAD_CR0.45
TP8016 PAD_CR0.45
TP8019 PAD_CR0.45
TP8022 PAD_CR0.45
TP8025 PAD_CR0.45
TP8028 PAD_CR0.45
TP8031 PAD_CR0.45
TP8034 PAD_CR0.45
TP8037 PAD_CR0.45
TP8040 PAD_CR0.45
TP8043 PAD_CR0.45
TP8046 PAD_CR0.45
TP8049 PAD_CR0.45
TP8052 PAD_CR0.45
TP8055 PAD_CR0.45
TP8058 PAD_CR0.45

TP7963 PAD_CR0.45
TP7966 PAD_CR0.45
TP7969 PAD_CR0.45
TP7972 PAD_CR0.45
TP7975 PAD_CR0.45
TP7978 PAD_CR0.45
TP7981 PAD_CR0.45
TP7984 PAD_CR0.45
TP7987 PAD_CR0.45
TP7990 PAD_CR0.45
TP7993 PAD_CR0.45
TP7996 PAD_CR0.45
TP7999 PAD_CR0.45
TP8002 PAD_CR0.45
TP8005 PAD_CR0.45
TP8008 PAD_CR0.45
TP8011 PAD_CR0.45
TP8014 PAD_CR0.45
TP8017 PAD_CR0.45
TP8020 PAD_CR0.45
TP8023 PAD_CR0.45
TP8026 PAD_CR0.45
TP8029 PAD_CR0.45
TP8032 PAD_CR0.45
TP8035 PAD_CR0.45
TP8038 PAD_CR0.45
TP8041 PAD_CR0.45
TP8044 PAD_CR0.45
TP8047 PAD_CR0.45
TP8050 PAD_CR0.45
TP8053 PAD_CR0.45
TP8056 PAD_CR0.45
TP8059 PAD_CR0.45

TP8159 PAD_CR0.45
TP8162 PAD_CR0.45
TP8163 PAD_CR0.45
TP8164 PAD_CR0.45
TP8165 PAD_CR0.45
TP8166 PAD_CR0.45
TP8167 PAD_CR0.45
TP8168 PAD_CR0.45
TP8169 PAD_CR0.45
TP8170 PAD_CR0.45
TP8171 PAD_CR0.45
TP8172 PAD_CR0.45
TP8173 PAD_CR0.45
TP8174 PAD_CR0.45
TP8175 PAD_CR0.45
TP8176 PAD_CR0.45
TP8177 PAD_CR0.45
TP8178 PAD_CR0.45
TP8179 PAD_CR0.45
TP8180 PAD_CR0.45
TP8181 PAD_CR0.45
TP8182 PAD_CR0.45
TP8183 PAD_CR0.45
TP8184 PAD_CR0.45
TP8185 PAD_CR0.45
TP8186 PAD_CR0.45
TP8187 PAD_CR0.45
TP8188 PAD_CR0.45
TP8189 PAD_CR0.45
TP8190 PAD_CR0.45
TP8191 PAD_CR0.45

TP8192 PAD_CR0.45
TP8193 PAD_CR0.45
TP8194 PAD_CR0.45
TP8195 PAD_CR0.45
TP8196 PAD_CR0.45
TP8197 PAD_CR0.45
TP8198 PAD_CR0.45
TP8199 PAD_CR0.45
TP8200 PAD_CR0.45
TP8201 PAD_CR0.45
TP8202 PAD_CR0.45
TP8203 PAD_CR0.45
TP8204 PAD_CR0.45
TP8205 PAD_CR0.45
TP8206 PAD_CR0.45
TP8207 PAD_CR0.45
TP8208 PAD_CR0.45
TP8209 PAD_CR0.45
TP8210 PAD_CR0.45
TP8211 PAD_CR0.45
TP8212 PAD_CR0.45
TP8213 PAD_CR0.45
TP8214 PAD_CR0.45
TP8215 PAD_CR0.45
TP8216 PAD_CR0.45
TP8217 PAD_CR0.45
TP8218 PAD_CR0.45
TP8219 PAD_CR0.45
TP8220 PAD_CR0.45
TP8221 PAD_CR0.45
TP8222 PAD_CR0.45
TP8223 PAD_CR0.45
TP8224 PAD_CR0.45

TP8225 PAD_CR0.45
TP8227 PAD_CR0.45
TP8229 PAD_CR0.45
TP8231 PAD_CR0.45
TP8233 PAD_CR0.45
TP8235 PAD_CR0.45
TP8237 PAD_CR0.45
TP8239 PAD_CR0.45
TP8241 PAD_CR0.45
TP8243 PAD_CR0.45
TP8245 PAD_CR0.45
TP8247 PAD_CR0.45
TP8249 PAD_CR0.45
TP8251 PAD_CR0.45
TP8253 PAD_CR0.45
TP8255 PAD_CR0.45
TP8257 PAD_CR0.45
TP8259 PAD_CR0.45
TP8261 PAD_CR0.45
TP8263 PAD_CR0.45
TP8265 PAD_CR0.45
TP8267 PAD_CR0.45
TP8269 PAD_CR0.45

TP8273 PAD_CR0.45
TP8275 PAD_CR0.45
TP8277 PAD_CR0.45
TP8279 PAD_CR0.45
TP8281 PAD_CR0.45
TP8283 PAD_CR0.45

TP8287 PAD_CR0.45
TP8289 PAD_CR0.45

TP8226 PAD_CR0.45
TP8230 PAD_CR0.45
TP8234 PAD_CR0.45
TP8236 PAD_CR0.45
TP8238 PAD_CR0.45
TP8240 PAD_CR0.45
TP8242 PAD_CR0.45
TP8244 PAD_CR0.45
TP8246 PAD_CR0.45
TP8248 PAD_CR0.45
TP8250 PAD_CR0.45
TP8252 PAD_CR0.45
TP8254 PAD_CR0.45
TP8256 PAD_CR0.45
TP8258 PAD_CR0.45
TP8260 PAD_CR0.45
TP8262 PAD_CR0.45
TP8264 PAD_CR0.45
TP8266 PAD_CR0.45
TP8268 PAD_CR0.45
TP8270 PAD_CR0.45
TP8272 PAD_CR0.45

TP8276 PAD_CR0.45
TP8278 PAD_CR0.45
TP8280 PAD_CR0.45
TP8282 PAD_CR0.45
TP8284 PAD_CR0.45
TP8286 PAD_CR0.45
TP8288 PAD_CR0.45
TP8290 PAD_CR0.45

TP7515 PAD_CR0.45
TP7513 PAD_CR0.45
TP7514 PAD_CR0.45
TP7518 PAD_CR0.45
TP7516 PAD_CR0.45
TP7519 PAD_CR0.45
TP7517 PAD_CR0.45
TP7520 PAD_CR0.45
TP7521 PAD_CR0.45
TP7522 PAD_CR0.45
TP7523 PAD_CR0.45
TP7525 PAD_CR0.45
TP7526 PAD_CR0.45
TP7530 PAD_CR0.45
TP7527 PAD_CR0.45
TP7528 PAD_CR0.45
TP7532 PAD_CR0.45
TP7529 PAD_CR0.45
TP7533 PAD_CR0.45
TP7531 PAD_CR0.45
TP7534 PAD_CR0.45
TP7535 PAD_CR0.45
TP7536 PAD_CR0.45
TP7538 PAD_CR0.45
TP7540 PAD_CR0.45
TP7537 PAD_CR0.45
TP7539 PAD_CR0.45
TP7543 PAD_CR0.45
TP7542 PAD_CR0.45
TP7544 PAD_CR0.45
TP7545 PAD_CR0.45

TP8271 PAD_CR0.45
TP7548 PAD_CR0.45
TP7546 PAD_CR0.45
TP7549 PAD_CR0.45
TP7551 PAD_CR0.45
TP7550 PAD_CR0.45
TP7552 PAD_CR0.45
TP7549 PAD_CR0.45
TP7553 PAD_CR0.45
TP7554 PAD_CR0.45
TP7555 PAD_CR0.45
TP7558 PAD_CR0.45
TP7556 PAD_CR0.45
TP7559 PAD_CR0.45
TP7557 PAD_CR0.45
TP7560 PAD_CR0.45
TP7563 PAD_CR0.45
TP7565 PAD_CR0.45
TP7562 PAD_CR0.45
TP7566 PAD_CR0.45
TP7564 PAD_CR0.45
TP7568 PAD_CR0.45
TP7569 PAD_CR0.45
TP7567 PAD_CR0.45
TP7572 PAD_CR0.45
TP7573 PAD_CR0.45
TP7570 PAD_CR0.45
TP7571 PAD_CR0.45
TP7574 PAD_CR0.45
TP7577 PAD_CR0.45
TP7578 PAD_CR0.45

TP7581 PAD_CR0.45
TP7579 PAD_CR0.45
TP7580 PAD_CR0.45
TP7583 PAD_CR0.45
TP7585 PAD_CR0.45
TP7582 PAD_CR0.45
TP7586 PAD_CR0.45
TP7587 PAD_CR0.45
TP7588 PAD_CR0.45
TP7589 PAD_CR0.45
TP7591 PAD_CR0.45
TP7590 PAD_CR0.45
TP7592 PAD_CR0.45
TP7594 PAD_CR0.45
TP7593 PAD_CR0.45
TP7596 PAD_CR0.45
TP7595 PAD_CR0.45
TP7599 PAD_CR0.45
TP7597 PAD_CR0.45
TP7601 PAD_CR0.45
TP7602 PAD_CR0.45
TP7600 PAD_CR0.45
TP7605 PAD_CR0.45
TP7606 PAD_CR0.45
TP7603 PAD_CR0.45
TP7604 PAD_CR0.45
TP7608 PAD_CR0.45
TP7607 PAD_CR0.45
TP7610 PAD_CR0.45
TP7609 PAD_CR0.45
TP7611 PAD_CR0.45

TP7612 PAD_CR0.45
TP7614 PAD_CR0.45
TP7613 PAD_CR0.45
TP7617 PAD_CR0.45
TP7616 PAD_CR0.45
TP7618 PAD_CR0.45
TP7620 PAD_CR0.45
TP7621 PAD_CR0.45
TP7622 PAD_CR0.45
TP7624 PAD_CR0.45
TP7623 PAD_CR0.45
TP7625 PAD_CR0.45
TP7629 PAD_CR0.45
TP7626 PAD_CR0.45
TP7627 PAD_CR0.45
TP7631 PAD_CR0.45
TP7628 PAD_CR0.45
TP7614 PAD_CR0.45
TP7630 PAD_CR0.45
TP7634 PAD_CR0.45
TP7635 PAD_CR0.45
TP7633 PAD_CR0.45
TP7638 PAD_CR0.45
TP7639 PAD_CR0.45
TP7636 PAD_CR0.45
TP7637 PAD_CR0.45
TP7641 PAD_CR0.45
TP7640 PAD_CR0.45
TP7642 PAD_CR0.45
TP7644 PAD_CR0.45

TP7647 PAD_CR0.45
TP7645 PAD_CR0.45
TP7648 PAD_CR0.45
TP7649 PAD_CR0.45
TP7651 PAD_CR0.45
TP7652 PAD_CR0.45
TP7653 PAD_CR0.45
TP7654 PAD_CR0.45
TP7655 PAD_CR0.45
TP7657 PAD_CR0.45
TP7658 PAD_CR0.45
TP7662 PAD_CR0.45
TP7659 PAD_CR0.45
TP7660 PAD_CR0.45
TP7664 PAD_CR0.45
TP7661 PAD_CR0.45
TP7665 PAD_CR0.45
TP7667 PAD_CR0.45
TP7668 PAD_CR0.45
TP7666 PAD_CR0.45
TP7671 PAD_CR0.45
TP7672 PAD_CR0.45
TP7669 PAD_CR0.45
TP7670 PAD_CR0.45
TP7673 PAD_CR0.45
TP7674 PAD_CR0.45
TP7675 PAD_CR0.45
TP7677 PAD_CR0.45

TP7763 PAD_CR0.45
TP7765 PAD_CR0.45
TP7768 PAD_CR0.45
TP7769 PAD_CR0.45
TP7771 PAD_CR0.45
TP7773 PAD_CR0.45
TP7775 PAD_CR0.45
TP7777 PAD_CR0.45
TP7779 PAD_CR0.45
TP7781 PAD_CR0.45
TP7783 PAD_CR0.45
TP7785 PAD_CR0.45
TP7787 PAD_CR0.45
TP7789 PAD_CR0.45
TP7791 PAD_CR0.45
TP7793 PAD_CR0.45
TP7792 PAD_CR0.45
TP7790 PAD_CR0.45
TP7788 PAD_CR0.45
TP7786 PAD_CR0.45
TP7784 PAD_CR0.45
TP7782 PAD_CR0.45
TP7780 PAD_CR0.45
TP7778 PAD_CR0.45
TP7776 PAD_CR0.45
TP7774 PAD_CR0.45
TP7772 PAD_CR0.45
TP7770 PAD_CR0.45
TP7768 PAD_CR0.45
TP7766 PAD_CR0.45
TP7764 PAD_CR0.45
TP7762 PAD_CR0.45
TP7760 PAD_CR0.45
TP7758 PAD_CR0.45
TP7756 PAD_CR0.45
TP7754 PAD_CR0.45
TP7752 PAD_CR0.45
TP7750 PAD_CR0.45
TP7748 PAD_CR0.45
TP7746 PAD_CR0.45
TP7744 PAD_CR0.45
TP7742 PAD_CR0.45

TP7823 PAD_CR0.45
TP7821 PAD_CR0.45
TP7825 PAD_CR0.45
TP7829 PAD_CR0.45
TP7827 PAD_CR0.45
TP7831 PAD_CR0.45
TP7833 PAD_CR0.45
TP7835 PAD_CR0.45
TP7837 PAD_CR0.45
TP7839 PAD_CR0.45
TP7841 PAD_CR0.45
TP7843 PAD_CR0.45
TP7847 PAD_CR0.45
TP7845 PAD_CR0.45
TP7851 PAD_CR0.45
TP7855 PAD_CR0.45
TP7857 PAD_CR0.45
TP7859 PAD_CR0.45
TP7861 PAD_CR0.45
TP7863 PAD_CR0.45
TP7865 PAD_CR0.45
TP7867 PAD_CR0.45
TP7869 PAD_CR0.45
TP7871 PAD_CR0.45
TP7873 PAD_CR0.45
TP7875 PAD_CR0.45
TP7877 PAD_CR0.45
TP7879 PAD_CR0.45
TP7881 PAD_CR0.45
TP7883 PAD_CR0.45
TP7885 PAD_CR0.45
TP7887 PAD_CR0.45
TP7889 PAD_CR0.45
TP7891 PAD_CR0.45
TP7893 PAD_CR0.45

TP7833 PAD_CR0.45
TP7832 PAD_CR0.45
TP7834 PAD_CR0.45
TP7836 PAD_CR0.45
TP7838 PAD_CR0.45
TP7840 PAD_CR0.45
TP7842 PAD_CR0.45
TP7844 PAD_CR0.45
TP7846 PAD_CR0.45
TP7848 PAD_CR0.45
TP7850 PAD_CR0.45
TP7852 PAD_CR0.45
TP7854 PAD_CR0.45
TP7856 PAD_CR0.45
TP7858 PAD_CR0.45
TP7860 PAD_CR0.45
TP7862 PAD_CR0.45
TP7864 PAD_CR0.45
TP7866 PAD_CR0.45
TP7868 PAD_CR0.45
TP7870 PAD_CR0.45
TP7872 PAD_CR0.45
TP7874 PAD_CR0.45
TP7876 PAD_CR0.45
TP7878 PAD_CR0.45
TP7880 PAD_CR0.45
TP7882 PAD_CR0.45
TP7884 PAD_CR0.45
TP7886 PAD_CR0.45
TP7888 PAD_CR0.45
TP7890 PAD_CR0.45
TP7892 PAD_CR0.45
TP7894 PAD_CR0.45

TP8080 PAD_CR0.45
TP8082 PAD_CR0.45
TP8084 PAD_CR0.45
TP8086 PAD_CR0.45
TP8088 PAD_CR0.45
TP8090 PAD_CR0.45
TP8092 PAD_CR0.45
TP8094 PAD_CR0.45
TP8096 PAD_CR0.45
TP8098 PAD_CR0.45
TP8100 PAD_CR0.45
TP8102 PAD_CR0.45
TP8104 PAD_CR0.45
TP8106 PAD_CR0.45
TP8108 PAD_CR0.45
TP8110 PAD_CR0.45
TP8112 PAD_CR0.45
TP8114 PAD_CR0.45
TP8116 PAD_CR0.45
TP8118 PAD_CR0.45
TP8120 PAD_CR0.45
TP8122 PAD_CR0.45
TP8124 PAD_CR0.45
TP8126 PAD_CR0.45
TP8128 PAD_CR0.45
TP8130 PAD_CR0.45
TP8132 PAD_CR0.45
TP8134 PAD_CR0.45
TP8136 PAD_CR0.45
TP8138 PAD_CR0.45
TP8140 PAD_CR0.45
TP8142 PAD_CR0.45
TP8144 PAD_CR0.45
TP8146 PAD_CR0.45
TP8148 PAD_CR0.45
TP8150 PAD_CR0.45
TP8152 PAD_CR0.45
TP8154 PAD_CR0.45
TP8156 PAD_CR0.45

TP8081 PAD_CR0.45
TP8083 PAD_CR0.45
TP8085 PAD_CR0.45
TP8087 PAD_CR0.45
TP8089 PAD_CR0.45
TP8091 PAD_CR0.45
TP8093 PAD_CR0.45
TP8095 PAD_CR0.45
TP8097 PAD_CR0.45
TP8099 PAD_CR0.45
TP8101 PAD_CR0.45
TP8103 PAD_CR0.45
TP8105 PAD_CR0.45
TP8107 PAD_CR0.45
TP8109 PAD_CR0.45
TP8111 PAD_CR0.45
TP8113 PAD_CR0.45
TP8115 PAD_CR0.45
TP8117 PAD_CR0.45
TP8119 PAD_CR0.45
TP8121 PAD_CR0.45
TP8123 PAD_CR0.45
TP8125 PAD_CR0.45
TP8127 PAD_CR0.45
TP8129 PAD_CR0.45
TP8131 PAD_CR0.45
TP8133 PAD_CR0.45
TP8135 PAD_CR0.45
TP8137 PAD_CR0.45
TP8139 PAD_CR0.45
TP8141 PAD_CR0.45
TP8143 PAD_CR0.45
TP8145 PAD_CR0.45
TP8147 PAD_CR0.45
TP8149 PAD_CR0.45
TP8151 PAD_CR0.45
TP8153 PAD_CR0.45
TP8155 PAD_CR0.45
TP8157 PAD_CR0.45

TP8062 PAD_CR0.45
TP8064 PAD_CR0.45
TP8066 PAD_CR0.45
TP8068 PAD_CR0.45
TP8070 PAD_CR0.45
TP8072 PAD_CR0.45
TP8074 PAD_CR0.45
TP8076 PAD_CR0.45
TP8078 PAD_CR0.45
TP8080 PAD_CR0.45
TP8082 PAD_CR0.45
TP8084 PAD_CR0.45
TP8086 PAD_CR0.45
TP8088 PAD_CR0.45
TP8090 PAD_CR0.45
TP8092 PAD_CR0.45
TP8094 PAD_CR0.45
TP8096 PAD_CR0.45
TP8098 PAD_CR0.45
TP8100 PAD_CR0.45
TP8102 PAD_CR0.45
TP8104 PAD_CR0.45
TP8106 PAD_CR0.45
TP8108 PAD_CR0.45
TP8110 PAD_CR0.45
TP8112 PAD_CR0.45
TP8114 PAD_CR0.45
TP8116 PAD_CR0.45
TP8118 PAD_CR0.45
TP8120 PAD_CR0.45
TP8122 PAD_CR0.45
TP8124 PAD_CR0.45
TP8126 PAD_CR0.45
TP8128 PAD_CR0.45
TP8130 PAD_CR0.45
TP8132 PAD_CR0.45
TP8134 PAD_CR0.45
TP8136 PAD_CR0.45
TP8138 PAD_CR0.45
TP8140 PAD_CR0.45
TP8142 PAD_CR0.45
TP8144 PAD_CR0.45
TP8146 PAD_CR0.45
TP8148 PAD_CR0.45
TP8150 PAD_CR0.45
TP8152 PAD_CR0.45
TP8154 PAD_CR0.45
TP8156 PAD_CR0.45
TP8158 PAD_CR0.45

Title	<Title>		
Size: A1	Document Number: <Doc>		Rev: <Rev Code>
Date: Friday, December 27, 2019	Sheet 75 of 75		